Final Report

Branford, CT

Public Works Feasibility Study
Branford CT DPW

January 16, 2012

Weston&Sampson
Weston & Sampson Engineers, Inc.
Five Centennial Drive
Peabody, MA 01960-7985
www.westonandsampson.com
Tel: 978-532-1900 Fax: 978-977-0100

TOWN OF BRANFORD, CT
PUBLIC WORKS FEASIBILITY STUDY
TABLE OF CONTENTS

EXECUTIVE SUMMARY

SECTION 1 - REPORT NARRATIVE

I. Introduction....1

II. Space Needs Assessment....1

III. Identification of Potential Sites and Initial Site Assessment....5

IV. Fatal Flaws Analysis....10

V. Site Assessment....11

VI. Conceptual Design Alternatives....12

VII. Conceptual Cost Estimate....15

SECTION 2 – EXISTING CONDITIONS PHOTOGRAPH ANALYSIS

SECTION 3 – INITIAL SPACE NEEDS ASSESSMENT

SECTION 4 – MODIFIED SPACE NEEDS ASSESSMENT

SECTION 5 – INITIAL LIST OF POTENTIAL SITES

SECTION 6 – SITE ASSESSMENTS

SECTION 7 – GENERIC SITE PLAN

SECTION 8 – SITE SELECTION MATRIX

SECTION 9 – CONCEPTUAL ALTERNATIVES (TOP TWO SITES)

SECTION 10 – CONCEPTUAL COST ESTIMATES

Executive Summary

The Town of Branford retained the services of Weston & Sampson to prepare a feasibility study for a new facility to house the Department of Public Works (DPW) as well as shop functions for the Board of Education (BOE) and General Government Buildings (GGB). The study included inspecting existing facilities, identifying deficiencies, interviewing staff, identifying current and future needs, evaluating publicly owned and privately owned sites, developing conceptual alternatives, and preparing budget cost estimates for the preferred alternatives.

The space needs assessment was prepared by conducting an operational analysis of the existing facility, reviewing the responsibilities of the departments, and interviewing key staff to identify the current and future needs of the Branford DPW, BOE, and GGB. The staff interviews were supplemented with industry practices/spaces which have been implemented on recently constructed public works facilities. The operational analysis also examined the efficiencies and inefficiencies of the current operation at the temporary rented facility. A summary of the inefficiencies associated with the temporary facility are discussed in Section 1 of this report.

The data obtained from the operations analysis and interviews were compiled and analyzed by Weston & Sampson. An initial space needs assessment identified a facility size of 48,536 square feet. The results of the initial space needs were then reviewed in detail by the project team and DPW staff to determine if the spaces could be reduced without negatively impacting operations. Based on valuable input from DPW staff, the Design Team was able to reduce, and in some cases combine, spaces in an effort to control the size and cost of the building. These reductions resulted in a modified space needs of 35,894 square feet. This resulted in an overall reduction in the space needs of 12,642 square feet for a reduction of approximately 26%.

The site selection process included reviewing potential public and private sites, gathering initial data on the identified sites, and conducting a fatal flaws analysis. A total of seven sites were initially identified by the Town; two publically owned and five privately owned. The privately owned sites were identified through a formal Request for Proposals (RFP) administered by the Committee. The following is a list of the seven sites identified for further analysis:

1. 48-86 Tabor Drive - Town owned (TP-1)
2. Veterans Memorial Park, Brushy Plain Road - Town owned (TP-2)
3. 15 East Industrial Road - Privately owned and offered for sale (PP-1)
4. Tabor Drive - Privately owned and offered for sale (PP-2)
5. 114 School Ground Road - Privately owned and offered for sale (PP-3)
6. 20 North East Industrial Road - Privately owned and offered for sale (PP-4)
7. 688 East Main Street - Privately owned and offered for sale (PP-5)

Utilizing this list of seven sites, a fatal flaws analysis was conducted to determine if a site met the criteria for further analysis. The fatal flaws analysis reduced this list to two (2) potential sites as identified below. A detailed account of this fatal flaws analysis can be found in Section 1 of this report.

1. *TP-1: 48-86 Tabor Drive*
2. *PP-4: 20 North East Industrial Road*

A detailed site assessment was conducted on the two remaining sites that were considered practical for a new facility. This detailed assessment consisted of reviewing the sites and assigning a score to each of the 12 evaluation criteria that are part of the Site Selection Matrix. The following is a summary of the results of the analysis.

Site Description	Matrix Score Without Acquisition Costs	Matrix Score With Acquisition Costs
TP-1: 48-86 Tabor Drive	53	74
PP-4: 20 North East Industrial Road	44	50

It is important to note that the purpose of the analysis is to identify the top ranked site for further detailed analysis. The analysis does not infer that the highest ranked site is necessarily the best alternative. The criteria and sub-factors provide a broad view of the strengths and weakness of each site. The score of the sites without acquisition costs represents the ranking of the sites with respect to operations. Since the scores for the two sites for this category were relatively close, alternatives for both sites were prepared for further analysis.

In general, both sites are capable of supporting the DPW / BOE / GGB operations. The following is a list of advantages and disadvantages for the two sites:

TP-1: 48-86 Tabor Drive

Advantages

- Site is publicly owned eliminating the additional cost associated with purchasing a new parcel.
- Site supports full program requirements.
- Site is zoned as General Industry District and will require a Site Plan for the Planning and Zoning Commission.
- The size of the site will allow the facility to be configured in a manner to promote the most efficient layout for DPW operations. In addition, the site has space for future expansion provisions.
- Full drive-through provisions can be provided at the vehicle and equipment storage garage and wash bay.

- Adequate utilities available.
- Limited residential abutters around property.
- Site has two separate access points to enter the property.
- There are no Aquifer Protection Areas or Natural Diversity Data Base Areas on this parcel.

Disadvantages

- Wetlands have been identified on portions of the parcel.
- The western portion of the parcel is in the 100-year & 500-year floodplain.
- Potential contamination issues will need to be addressed during construction of the DPW facility due to former onsite activities (stockpiles).
- The main access roadway to the site (Montowese Street) does flood in an area where the traffic goes underneath the railroad tracks during very heavy storm events.
- There is a small culvert that will often flood during high tide on Tabor Drive.
- The alternative access roadway to the site is through residential area (Pine Orchard Road). The sight distance is very minimal when leaving the parcel and turning on to Pine Orchard Road.
- The development of the site for a new Public Works Facility will require off-site improvements and the construction of new access roads into the site adding to the initial construction costs.

PP-4: 20 North East Industrial Road

Advantages

- Site supports full program requirements.
- The site has two structures which can be renovated and reused to support a portion of the DPW program which will help reduce the initial construction cost of the facility.
- Adequate utility availability.
- Site is zoned as General Industry District and will require a Site Plan for the Planning and Zoning Commission.
- Site access is very close to Route 1 and ultimately Interstate 95.
- There are no Aquifer Protection Areas or Natural Diversity Data Base (NDDB) Areas on this parcel.

Disadvantages

- Site is privately owned and must be purchased by the Town.
- A portion of the site (northwest area) is known for flooding during heavy rain storm events and is in the 100-year floodplain and the floodway.

- The existing buildings are not consolidated on the site and are centrally located which will impact the ability to arrange the facility in the most efficient layout for DPW operations.
- Site has limited ability for future expansion.
- The site is currently contaminated and provisions from the existing owner must be implemented to ensure that a remediated site will be delivered to the Town.
- Remediation of the site could impact the construction schedule of a new DPW facility.

In general, both sites have the ability to provide the following operational improvements:

- Vehicles will be stored inside which eliminates de-icing and warming of diesel fueled vehicles. This will mean less idling time and reduction in exhaust emissions.
- The current stacked vehicle storage arrangement with one overhead door has been eliminated. Vehicles, equipment, and workspace are easily accessible resulting in more efficient work space and response times.
- Building will conform to the latest and anticipated future regulatory requirements.
- Code compliant and clean work environment for Town employees.
- Building(s) will be equipped with critical components for emergencies including emergency power provisions for entire facility to provide continuous services to the Town.
- The facility will protect the Town's multi-million dollar investment in vehicles and equipment by protecting the equipment from corrosive conditions and vandalism. This will extend the useful life of the vehicles and equipment.

Conceptual cost estimates were prepared for the preferred alternative. The estimates were prepared using square foot costs based on historical data for similar DPW facilities. In general, the cost estimate is based upon "average" building finishes and equipment as identified in the cost estimate spreadsheet. The results of this cost estimates are as follows:

Tabor Drive Site

New Building Cost:	$6,108,559	
• Building		
• Mezzanine		
• Sub-Slab Vent System		
Industrial Equipment and Fueling:	$715,000	
Site Development & Support Structure Costs:	$1,154,375	
Design Contingency (3%)	$239,338	
Subtotal Construction Cost:		$8,217,272
Owner Administrative Costs:	$932,682	
• A&E fees		
• Furnishings		
• Communication/low voltage system		
• Printing/advertisement		
• Test & inspections		
Construction Contingency (8%):	$657,382	
Subtotal Administrative and Contingency:		$1,590,064
Total Project Cost DPW Facility (Based on Average Bid Price):		$9,807,336

Tabor Drive Site – Off-Site / Shared Site Improvements

Shared Site Improvements - Access Roads:	$596,500	
Off-Site Roadway Improvements:	$345,280	
Design Contingency (3%):	$28,253	
Owner Administrative Costs:	$98,887	
Construction Contingency (8%):	$77,603	
Total Off-Site / Shared Site Improvements:		$1,146,523
Total DPW Facility & Off-Site / Shared Site Improvements:		$10,953,859

North East Industrial Road Site

New Building Cost:	$4,589,656	
• Building		
• Mezzanine		
• Sub-Slab Vent System		
Renovated Building Cost:	$732,660	
• Building		
• Sub-Slab Vent System		
Industrial Equipment and Fueling:	$715,000	
Site Development & Support Structure Costs:	$1,154,375	
Design Contingency (3%)	$215,751	
Subtotal Construction Cost:		$7,407,442
Site Acquisition Costs:	$1,250,000	
Owner Administrative Costs:	$875,127	
• A&E fees		
• Furnishings		
• Communication/low voltage system		
• Printing/advertisement		
• Test & inspections		
Construction Contingency (8%):	$592,595	
Subtotal Administrative and Contingency:		$2,717,722
Total Project Cost (Based on Average Bid Price):		$10,125,164

The estimates are based on the average bid prices for similar projects completed in the last four years. It should be noted that the recent bidding climate has been favorable and has resulted in the low bids which have been on average 8 - 10% below the average bid price.

I. Introduction

The Town of Branford retained the services of Weston & Sampson to prepare a feasibility study for a new Department of Public Works (DPW) Facility. The objective of the study was to develop a program of building and site functions and identify a site which is capable of cost effectively and efficiently supporting the services offered by the DPW to the community. The new facility will also include support space for the Board of Education and General Government Buildings. The study included inspecting existing facilities, identifying deficiencies, interviewing DPW, Board of Education (BOE), and General Government Buildings (GGB) staff, identifying current and future needs, evaluating publicly owned and privately owned sites, developing conceptual alternatives, and preparing budget cost estimates for the preferred alternatives.

II. Space Needs Assessment

The Project Team prepared a space needs assessment to identify the current and future needs of the Branford DPW, BOE, and GGB. The assessment included analyzing current operations at the existing facility to identify potential deficiencies in the facility which need to be corrected with the construction of a new DPW facility. The assessment also included interviewing key staff to learn first hand the operational deficiencies with the existing rented facility. To supplement the staff interviews, the Project Team reviewed industry practices/spaces which have been implemented on recently constructed public works facilities.

Operations Analysis

The operations analysis consisted of inspecting the existing facility which is used to support the operations associated with providing services to the Town. This analysis was used to identify current responsibilities of the DPW, BOE, and GGB and to determine functional inadequacies and space limitations of the existing building and site.

The DPW, BOE, and GGB are responsible for maintaining the Town infrastructure and associated open space within the community. A list of some of the vital services provided by the DPW includes:

- Maintaining more than 100 miles of road and the associated drainage system for these roads
- Minor reconstruction of roads and storm drain systems
- Roadway right of way improvements
- Management of the Town's sidewalk replacement program
- Tree maintenance and plantings for the Town
- Maintenance of open space

- Maintenance of seawalls
- Snow and ice removal
- Sign maintenance
- Street light maintenance
- Traffic signal repair
- Emergency storm cleanup
- Fueling facilities
- Repair and maintenance of all Town owned vehicles, heavy equipment, and construction equipment

The existing operations are supported out of a portion of a rented warehouse space (approximately 20,000 SF) located at 137 N Branford Road. This facility was not originally designed to support public works operations. While this temporary facility is capable of meeting the short term immediate needs of the departments, the facility is not capable of efficiently meeting the long term needs of the departments. As a result, there are several operational inefficiencies which impact the level of service the DPW is able to provide to the community. The following is a summary of some of the deficiencies/inefficiencies associated with the existing rented facility:

- Facility is undersized to support current operations requiring a portion of the multi-million dollar fleet to be stored outdoors. This impacts DPW response times during cold and inclement weather conditions. In addition, this contributes to the rapid deterioration of high value Town owned equipment and increases vehicle maintenance costs.
- Undersized facility lacks adequate office space. DPW administration must work out of a temporary office trailer.
- Facility lacks adequate and appropriate floor drains. This results in the build up of water on shop and maintenance floors during inclement weather creating an unsafe work environment.
- Maintenance and storage area is only accessible by one overhead door. This creates a bottle neck condition impacting response times. In addition, the potential malfunction of the door could prevent DPW from performing their daily activity or the emergency response activity (snow removal, ice treatment, storm cleanup).
- Inadequate working conditions including:
  - Poor ventilation
  - Inadequate lighting
  - Confined workshop areas
  - Inadequate training facilities for state mandated employee training

- Inadequate employee facilities

These deficiencies directly impact operations and the efficiency of service that the DPW is able to provide to the Town. A photograph analysis of some of the deficiencies observed in the existing facility has been included in **Section 2** of this report.

Staff Interviews

The staff interviews focused on identifying current deficiencies, identifying all DPW, BOE, and GGB functions, and identifying current and future space requirements. Interviews were conducted with the administrative staff and division supervisors, and division staff.

The information obtained during these interviews provided detailed accounts of space deficiencies in the existing facility which affects day to day operations. A summary of the departments' organization and equipment information is as follows:

Divisions	Staff
• DPW Administration	3
• Highway Workforce	11 (plus 3 seasonal)
• Vehicle Maintenance Workforce	4
• Board of Education	1
• General Government Buildings	2
Total:	21 (plus 3 seasonal)

Vehicle / Equipment	Quantity
• Large Vehicles	19
o Dump Trucks	
o Loaders / Backhoes	
o Sweepers	
• Small Vehicles	15
o Sedans	
o Utility Vehicles	
o Pickups / 1 Tons	
• Support Equipment	8
o Tractors / Mowers	
o Chippers	
o Trailers	
o Compressors	
Total:	42

This list of equipment does not include small support equipment such as pumps, hand tools, etc. Provisions to store this type of equipment will be included in the final program accordingly.

Space Needs / Room Part Plans

The data obtained from the operations analysis and interviews were compiled and analyzed by Weston & Sampson. The analysis consisted of individually identifying the space needs for the operations of each function by developing individual room programming sketches. Sketches were prepared for each major space including office / office support areas, employee facilities, shop space, vehicle maintenance, wash area, and vehicle/equipment storage areas. These space requirements were then assembled into a space allocation matrix. The initial space needs assessment identified a need of 48,536 square feet.

A copy of the initial space allocation program and associated room sketches has been included in **Section 3** of this report.

The results of the initial space needs were then reviewed in detail by the project team and DPW staff to determine if the spaces could be reduced without negatively impacting operations. Based on valuable input from DPW staff, the Design Team was able to reduce, and in some cases combine, spaces in an effort to control the size and cost of the building. These reductions resulted in a modified space needs of 35,894 square feet. This resulted in an overall reduction in the space needs of 12,642 square feet for a reduction of approximately 26%.

The results of the modified space needs assessment were then compared to Weston & Sampson's in-house *Department of Public Works Space Needs Guidelines*. These guidelines were developed utilizing historic data from similar DPW facilities which have been programmed within the last five (5) years for other New England communities. Utilizing the size of the DPW, BOE, and GGB work force and the associated vehicle fleet, the guidelines identify a facility size which ranges from approximately 35,400 square feet to 41,600 square feet. These guidelines demonstrate that the modified detailed space needs assessment is in line with today's standards for DPW facilities.

A copy of the modified space allocation program and the space needs guidelines worksheet has been included in **Section 4** of this report.

III. Identification of Potential Sites and Initial Site Assessment

The site selection process included reviewing potential public and private sites, gathering initial data on the identified sites, and conducting a fatal flaws analysis. Sites which passed the initial fatal flaws analysis were further evaluated utilizing a site selection matrix consisting of 12 evaluation criteria. Each of the criteria was assigned a weighting factor and utilized to rank the sites. Information gathered during interviews with staff from the DPW, BOE, and GGB was also utilized in this analysis.

An initial list of potential sites was created by the Town based on previous work completed by the Committee as well as through a Request for Proposal to purchase privately owned land for a new Public Works Facility.

There are a total of seven sites on the master list for the initial site assessment. A plan identifying the seven sites has been included in **Section 5** of this report. The Town owned sites were identified through a comprehensive review of all Town owned sites by the Committee. The privately owned sites were identified through a formal Request for Proposals (RFP) administered by the Committee. These sites consisted of 2 Town owned sites (TP-1 & TP-2) and 5 privately owned sites (PP-1 through PP-5) which are currently available for sale. The following is a list of the sites:

1. 48-86 Tabor Drive - Town owned (TP-1)
2. Veterans Memorial Park, Brushy Plain Road - Town owned (TP-2)
3. 15 East Industrial Road - Privately owned and offered for sale (PP-1)
4. Tabor Drive - Privately owned and offered for sale (PP-2)
5. 114 School Ground Road - Privately owned and offered for sale (PP-3)
6. 20 North East Industrial Road - Privately owned and offered for sale (PP-4)
7. 688 East Main Street - Privately owned and offered for sale (PP-5)

The site selection process included conducting field visits to each of the sites, assembling all existing available reports, maps, and figures, reviewing local Zoning Regulations and utilizing the Town of Branford's web based GIS system and environmental resource mapping. A copy of the site evaluation material has been included in **Section 6** of this report. An initial site assessment of each selected site is included below.

TP-1: 48-86 Tabor Drive

- The Town of Branford owns this 77.02 acre parcel.
- The potential future plans for this parcel include the new Public Works Facility and possible softball, baseball, football fields, and passive recreation/hiking.
- There are two access points for the property. The primary access is at Tabor Drive

and the emergency access is at Pine Orchard Road.

- Public water and public sewer are available for this site.
- The western portion of the site is located in the 100-year & 500-year floodplain.
- Wetlands have been identified on site.
- The site is zoned as a General Industry 2 (IG-2) District which is suitable for Town of Branford buildings, facilities and uses.
- An initial Traffic Study was conducted in the area by Milone & MacBroom and can be found in a reported dated March 27, 2009.
- An Environmental Investigation was completed by Fuss & O'Neill on the site of the proposed Public Works Complex. Details from the environmental field activities can be found in a report dated October 2008. Fuss & O'Neill's overall assessment of the 10-acre area they evaluated was generally good. There was no evidence of a severe release of potentially hazardous substances to the subsurface soils. However, there are a couple areas of concern and stockpiles that will need to be addressed prior to construction. Fuss & O'Neill also recommends installing permanent gas ports along the southern boundary of the parcel to monitor the potential for landfill gas migration during construction activities.

TP-2: Veterans Memorial Park, Brushy Plain Road

- The Town of Branford owns this 38.43 acre parcel.
- This western portion of the parcel is heavily wooded and has a 30'+/- grade change. There is a brook running through the center of the parcel. The southeastern portion of the parcel is currently known as the Veterans Memorial Park. This park includes a storage garage, public restrooms, a pavilion roof, asphalt basketball court, playground, tennis courts, and a large grass area with two baseball diamonds.
- The primary access to the site is from Brushy Plain Road.
- Public water and public sewer are available for this site.
- Wetlands have been identified on site.
- The site is zoned as a Residence (R-4) District. Municipal Facilities will require a Special Exception Approval from the Planning and Zoning Commission.

PP-1: 15-21 East Industrial Road

- There are 5.28 acres of land for sale along East Industrial Road which are being sold by N & B Holdings LLC. The 5.28 acres include two parcels of land next to each other.
- The first parcel is 3.02 acres and includes a building which is approximately 29,500 square feet. The building consists of 8 service bays, 2 truck wash bays, first and second floor office spaces, miscellaneous warehouse, and retail space. The current tenant is using this facility as a Freightliner Truck Sales & Service Center.

- The second parcel is 2.26 acres and is being used by Freightliner for the trucks that are for sale or overflow parking.
- N & B Holdings LLC is selling the two properties for $9,500,000. The Town of Branford Assessor's Office appraised the first parcel at $2,595,900 and the second parcel at $540,500 for a total apprised value of $3,136,400 for both parcels.
- The primary access to the site is from East Industrial Road.
- Public water and public sewer are available for this site.
- The site is zoned as a General Industry 2 (IG-2) District which is suitable for Town of Branford buildings, facilities and uses.
- The existing tenant requires up to 18 months to relocate.

PP-2: Tabor Drive

- There is a 14.50 acre parcel of land for sale at the south end of Tabor Drive which is being sold by Henry W. Zuwalick.
- A capped landfill occupies roughly half of the southern portion of the parcel. The capped landfill has mature trees along the side slopes and has a 43'+/- grade change around the landfill. The northern portion of the site is fairly level with open and wooded areas.
- The primary access to the site is from Tabor Drive.
- Public water and public sewer are available for this site.
- The site is zoned as a Residence (R-3) District. Municipal Facilities will require a Special Exception Approval from the Planning and Zoning Commission.
- Henry W. Zuwalick is selling the property for $350,000. The Town of Branford Assessor's Office appraised the parcel at $218,400.
- The central portion of the site is located in the 100-year & 500-year floodplain.
- Wetlands have been identified on site.
- Fuss & O'Neill was hired by the Town of Branford to evaluate the completeness of a Phase II investigation that was previously conducted at the Former Branford Landfill property, identify any data gaps, and recommend whether additional studies are necessary at the site. Based on a letter report dated September 5, 2003, Fuss & O'Neill have concerns regarding the Phase II investigation and the adequacy of the existing information. They further state the identification and characterization of recognized environmental conditions was incomplete and the scope of the Phase II environmental sampling and analysis was insufficient to determine if a release of contaminants had occurred. They recommend a Phase III Environmental Site Assessment be performed to fully delineate and characterize all areas and contaminant plumes on the site.
- Based on Fuss & O'Neill's letter report, this property may be classified as an "establishment" in accordance with Connecticut's Property Transfer Act and could

trigger certain Transfer Act requirements. These requirements can include filing of applicable forms with the Sate and the performance of site investigations within two years and initiation of remediation within three years.

PP-3: 114 School Ground Road

- There is a 3.84 acre parcel of land for sale along School Ground Road which is being sold by Jarvis Creek Truck Sales & Service, LLC.
- The primary access to the site is from School Ground Road.
- Public water and public sewer are available for this site.
- The site is zoned as a General Industry 2 (IG-2) District which is suitable for Town of Branford buildings, facilities and uses.
- Jarvis Creek Truck Sales & Service, LLC is selling the property for $1,900,000. The Town of Branford Assessor's Office appraised the parcel at $941,930.
- The entire property is located in the 100-year floodplain and the southern portion of the site is located in the 100-year floodway.
- This parcel of land includes two buildings. The first building consists of 3 drive-through bays, multiple overhead doors and approximately 3,000 square feet of office space. The second building consists of truck bays and a warehouse area.
- The property has been used as a truck sales and service facility for over 30 years. The site has been used for the storage of trucks and heavy construction equipment.

PP-4: 20 North East Industrial Road

- There is a 5.10 acre parcel of land for sale along North East Industrial Road being sold by Quality Carriers Inc.
- This parcel of land includes two buildings. The first building is approximately 5,800 square feet, includes 3 service bays and 1,600 square feet of office space on the second floor. The second building is approximately 6,720 square feet, includes 3 truck wash bays and 500 square feet of office space.
- The primary access to the site is from North East Industrial Road.
- Public water and public sewer are available for this site.
- The site is zoned as a General Industry 2 (IG-2) District which is suitable for Town of Branford buildings, facilities and uses.
- Quality Carriers Inc. is selling the property for $1,250,000. The Town of Branford Assessor's Office appraised the parcel at $971,000.
- The northwestern portion of the site is located in the 100-year floodplain and floodway (approximately 0.7 acres).
- A Phase I Environmental Site Assessment was prepared by Sovereign Consulting Inc in November 2010 for the subject site. Sovereign's recommendations included conducting a Phase II subsurface investigation to collect soil and groundwater

samples for recognized environmental conditions identified during the Phase I investigation.

- A Phase II Environmental Site Assessment was prepared by Sovereign Consulting Inc. in December 17, 2010 for the subject site. Sovereign Consulting Inc. identified eleven areas of concern and collected subsurface and groundwater samples from these areas. An evaluation of the soil analytical data indicate releases have occurred in nine of the areas of concern at the site from past site activities. In addition, the groundwater analytical data indicate an apparent release of contaminants of concern to the groundwater at the subject site. Sovereign Consulting Inc. recommended a Phase III Environmental Site Assessment be performed to fully delineate and characterize all areas and contaminant plumes on the site.
- Based on the Phase II Environmental Site Assessment report prepared by Sovereign Consulting Inc, this property is considered an "establishment" in accordance with Connecticut's Property Transfer Act and would trigger certain Transfer Act requirements. These requirements can include filing of applicable forms with the State and the performance of site investigations within two years and initiation of remediation within three years. It should be noted that the Owner has indicated that should the Town purchase the property, the owner will take responsibility for the clean-up of the site.

PP-5: 688 East Main Street

- There is a parcel of land for sale near the intersection of East Main Street and Baldwin Avenue being sold by Parish Farm Partners, LLC.
- This parcel of land was recently subdivided. The front portion of the property includes a building facing East Main Street that is approximately 36,000 square feet. The remaining portion of the site was originally available for purchase (2 lots). However, the Town has since been informed that the center parcel has been sold and is no longer available for purchase.
- The primary access to the site is from Baldwin Drive.
- Public water and public sewer are available for this site.
- The site is zoned as a General Industry 2 (IG-2) District which is suitable for Town of Branford buildings, facilities and uses.
- The original proposal included selling one lot of the property for $1,800,000 and the other lot for $1,320,000. Town of Branford Assessor's Office has appraised the parcel at $4,460,600. However this appraised value includes all 13 acres plus the existing building.
- The topography for the site has a down gradient slope north to a detention pond and then a 40'+/- grade change on the north end of the property.

IV. Fatal Flaw Analysis

A fatal flaws analysis was then conducted for each site. The fatal flaws analysis consists of reviewing each parcel to determine if it passed the basic criteria necessary to be further considered for a DPW site. A site was considered to be inadequate to support a DPW facility if it answered in the affirmative for any one of the following criteria:

1. Size - A site which does not meet the minimum acreage of the Town of Branford, CT Department of Public Works Minimum Generic Site Plan (4.9 acres). A copy of the Minimum Generic Site Plan has been included in **Section 7** of this report.
2. Location - A site location which is not suitable for a DPW Facility.
3. Past/Present Use - A site which current or historical usage would render the site unusable.
4. Floodplain- A site which contains floodplain areas which would render the useable areas less than the minimum operational size.
5. Appraisal Value - A site which the private property owner is selling his land to the Town at an inflated price above the appraisal value.

Zoning compatibility was not included as a basic evaluation criterion since there are very limited zoning restrictions for a new DPW Facility. Based on Branford Zoning Regulations effective June 1, 2011, if a new DPW Facility is constructed on Residential zoned land the Town would require a Special Exception from the Planning and Zoning Commission. Otherwise, if a new DPW Facility is constructed on Industry General zoned land the Town will need to submit a Site Plan to the Planning and Zoning Commission. The sites listed below answered in the affirmative to one or more fatal flaws. Consequently, these sites have been eliminated from further consideration.

1. *TP-2: Veterans Memorial Park, Brushy Plain Road*
   The parcel of land is currently a park and is surrounded by residential areas. This site is being eliminated from further analysis due to its current location being surrounded by excessive sensitive receptors. This location/neighborhood is not conducive for a DPW Facility. In addition, the site contains some steeply sloped areas which would make potential development prohibitive.

2. *PP-1: 15-21 East Industrial Road*
   N & B Holdings LLC is selling their two adjoining properties for $9,500,000. The Town of Branford Assessor's Office appraised the first parcel at $2,595,900 and the second parcel at $540,500 for a total apprised value of $3,136,400 for both parcels. This site is

being eliminated from further analysis due to the excessive cost to purchase the land.

3. *PP-2: Tabor Drive*
   A capped landfill occupies roughly half of the southern portion of the parcel and the central portion of the site is located in the 100-year & 500-year floodplain. This site is being eliminated from further analysis due to it not being cost effective to construct a DPW Facility on top of a landfill. In addition, there is only approximately 2.5 acres of usable land available to construct a DPW Facility once the landfill and floodplain areas are removed from the total acreage which does not meet the minimum 4.9 acre requirement.

4. *PP-3: 114 School Ground Road*
   The entire property is located in the 100-year floodplain and the southern portion of the site is located in the 100-year floodway. This site is being eliminated from further analysis due to the entire property being located within the floodplain. There is no where to construct, expand, or retrofit a DPW Facility without being in the floodplain. Furthermore, the 3.84 acre parcel does not meet the minimum 4.9 acre requirement.

5. *PP-5: 688 East Main Street*
   The original proposal included two parcels adequately sized to meet the minimum generic site plan requirements. However, due to the recent sale of the center parcel, the remaining parcel is inadequate to meet the minimum site needs. Although the acreage of the remaining parcel meets the 4.9 acre minimum requirement, this parcel contains a large detention pond and steeply sloped area to the north which results in the useable area of the site being reduced below the minimum site requirement.

V. Site Assessment

A detailed site assessment was conducted on the two remaining sites that were considered practical for a DPW Facility. This detailed assessment consisted of reviewing the sites and assigning a score to each of the 12 evaluation criteria that are part of the DPW Site Selection Matrix. The 12 criteria were developed to identify the most cost effective and efficient site to support DPW operations while taking into consideration the impacts on the immediate surrounding community. These criteria included:

1. Property Ownership
2. Location
3. Physical Site Features
4. Site History
5. Zoning Consistency
6. Environmental Impacts

7. Access to Utilities
8. Permitting
9. Traffic Impacts
10. Operational Impacts
11. Cost of Site Development
12. Cost of Construction

The criteria were further divided into sub-factors with associated weighting values. Weston & Sampson used these criteria and sub-factors to conduct the site selection analysis. A detailed description of the analysis was prepared for each site and utilized to identify the appropriate score for each of the evaluation criteria. Upon completing the analysis, the scores were added together to produce a total score for the site. Sites with higher scores demonstrate that they have a higher potential of efficiently and cost effectively supporting a new DPW facility while minimizing impacts to the surrounding community. The following is a summary of the results of the analysis.

Site Description	Matrix Score Without Acquisition Costs	Matrix Score With Acquisition Costs
TP-1: 48-86 Tabor Drive	53	74
PP-4: 20 North East Industrial Road	44	50

It is important to note that the purpose of the analysis is to identify the top ranked site for further detailed analysis. The analysis does not infer that the highest ranked site is necessarily the best alternative. The criteria and sub-factors provide a broad view of the strengths and weakness of each site. Sites with more strengths are then advanced to the next phase of developing conceptual plans to assess the ability of the site to support the building and operations. The Site Selection Matrix is included in **Section 8** of this report. The score of the sites without acquisition costs represents the ranking of the sites with respect to operations. Since the scores for the two sites for this category were relatively close, alternatives for both sites were prepared for further analysis

VI. Conceptual Design Alternatives

Utilizing the results of the final space needs assessment, the Project Team prepared conceptual alternatives for the TP-1 Tabor Drive site and PP-4 North East Industrial Road site. The alternatives were prepared with the following operational measures in mind:

- Attempt to consolidate all operations under one roof
- Locate interior spaces to provide efficient interior circulation patterns

- Provide full access around the perimeter of the facility
- Maintain adequate access to/from the salt/sand operations area
- Provide bulk material storage area with adequate yard area for large vehicle maneuvering
- Provide area for canopy/cold storage
- Provide exterior storage area for vehicle maintenance "out-of-service" vehicles and non-first responder equipment (trailers, sedans, etc.)
- Maintain a counter clockwise circulation pattern to promote safe turning movements for large vehicles
- Provide fueling at entry to the site to allow access by other departments without having to enter the yard area
- Provide adequate parking for public and employees
- Attempt to segregate small / public vehicle traffic from heavy truck traffic
- Minimize north face exposure of operational activities
- Consolidate site operations to allow for secured yard and controlled access

The alternatives were prepared by developing "Block Building Plans". These Block Plans were separated into the major space categories for the new facility as follows:

- Administration & Employee Facilities (DPW, BOE, GGB)
- Shops (DPW, BOE, GGB)
- Vehicle Maintenance
- Vehicle / Equipment Storage/Operations Garage (DPW, BOE, GGB)
- Wash Bay

The configuration and size of each building block was developed by piecing together the individual room sketches identified during the space needs assessment. The locations of the concepts for the Tabor Drive site were focused generally in the recently cleared area located to the south of the site. Locations of potential future recreation fields were shown on the concepts based on a plan provided by the Town and are shown as place holders only. A formal process of identifying the needs and size of the fields will need to be undertaken before the master plan layout can be finalized. Copies of these initial conceptual site plans are included as **Section 9** of this report. In general, both sites are capable of supporting the DPW / BOE / GGB operations. The following is a list of advantages and disadvantages for the two sites:

TP-1: 48-86 Tabor Drive

Advantages

- Site is publicly owned eliminating the additional cost associated with purchasing a new parcel.
- Site supports full program requirements.
- Site is zoned as General Industry District and will require a Site Plan for the Planning and Zoning Commission.
- The size of the site will allow the facility to be configured in a manner to promote the most efficient layout for DPW operations. In addition, the site has space for future expansion provisions.
- Full drive-through provisions can be provided at the vehicle and equipment storage garage and wash bay.
- Adequate utilities available.
- Limited residential abutters around property.
- Site has two separate access points to enter the property.
- There are no Aquifer Protection Areas or Natural Diversity Data Base Areas on this parcel.

Disadvantages

- Wetlands have been identified on portions of the parcel.
- The western portion of the parcel is in the 100-year & 500-year floodplain.
- Potential contamination issues will need to be addressed during construction of the DPW facility due to former onsite activities (stockpiles).
- The main access roadway to the site (Montowese Street) does flood in an area where the traffic goes underneath the railroad tracks during very heavy storm events.
- There is a small culvert that will often flood during high tide on Tabor Drive.
- The alternative access roadway to the site is through residential area (Pine Orchard Road). The sight distance is very minimal when leaving the parcel and turning on to Pine Orchard Road.
- The development of the site for a new Public Works Facility will require off-site improvements and the construction of new access roads into the site adding to the initial construction costs.

PP-4: 20 North East Industrial Road

Advantages

- Site supports full program requirements.
- The site has two structures which can be renovated and reused to support a portion of the DPW program which will help reduce the initial construction cost of the facility.
- Adequate utility availability.

- Site is zoned as General Industry District and will require a Site Plan for the Planning and Zoning Commission.
- Site access is very close to Route 1 and ultimately Interstate 95.
- There are no Aquifer Protection Areas or Natural Diversity Data Base (NDDB) Areas on this parcel.

Disadvantages

- Site is privately owned and must be purchased by the Town.
- A portion of the site (northwest area) is known for flooding during heavy rain storm events and is in the 100-year floodplain and the floodway.
- The existing buildings are not consolidated on the site and are centrally located which will impact the ability to arrange the facility in the most efficient layout for DPW operations.
- Site has limited ability for future expansion.
- The site is currently contaminated and provisions from the existing owner must be implemented to ensure that a remediated site will be delivered to the Town.
- Remediation of the site could impact the construction schedule of a new DPW facility.

In general, both sites have the ability to provide the following operational improvements:

- Vehicles will be stored inside which eliminates de-icing and warming of diesel fueled vehicles. This will mean less idling time and reduction in exhaust emissions.
- The current stacked vehicle storage arrangement with one overhead door has been eliminated. Vehicles, equipment, and workspace are easily accessible resulting in more efficient work space and response times.
- Building will conform to the latest and anticipated future regulatory requirements.
- Code compliant and clean work environment for Town employees.
- Building(s) will be equipped with critical components for emergencies including emergency power provisions for entire facility to provide continuous services to the Town.
- The facility will protect the Town's multi-million dollar investment in vehicles and equipment by protecting the equipment from corrosive conditions and vandalism. This will extend the useful life of the vehicles and equipment.

VII. Conceptual Cost Estimate

Conceptual cost estimates were prepared for the preferred alternative. The estimated were prepared using square foot costs based on historical data for similar DPW facilities. In general, the cost estimate is based upon "average" building finishes and equipment as

identified in the cost estimate spreadsheet and as described as follows:

- Construction of a new pre-engineered metal building with partial masonry wall finish and concrete protection wall for the vehicle storage area, maintenance area, wash bay area, and shop areas
- Factory foam insulated architectural metal panel with improved exterior finish material (high end panel or masonry) along the administrative wing of the building
- Basic industrial support equipment for vehicle maintenance operations
- Site improvements, including storm water management and paving improvements
- Contingencies for unanticipated costs

The estimated cost for new building construction and site improvements are based on costs of similar construction for which bid prices are available, supplemented by cost data obtained from published sources. It is assumed that the project will be publicly bid and prices are based on 2011 prices. The cost estimate does not account for escalation. Escalation factors should be included once the project time line has been established by the Town. The results of this cost estimates are as follows:

Tabor Drive Site

New Building Cost:	$6,108,559	
• Building		
• Mezzanine		
• Sub-Slab Vent System		
Industrial Equipment and Fueling:	$715,000	
Site Development & Support Structure Costs:	$1,154,375	
Design Contingency (3%)	$239,338	
Subtotal Construction Cost:		$8,217,272
Owner Administrative Costs:	$932,682	
• A&E fees		
• Furnishings		
• Communication/low voltage system		
• Printing/advertisement		
• Test & inspections		
Construction Contingency (8%):	$657,382	
Subtotal Administrative and Contingency:		$1,590,064
Total Project Cost DPW Facility (Based on Average Bid Price):		$9,807,336

Tabor Drive Site – Off-Site / Shared Site Improvements

Shared Site Improvements - Access Roads:	$596,500	
Off-Site Roadway Improvements:	$345,280	
Design Contingency (3%):	$28,253	
Owner Administrative Costs:	$98,887	
Construction Contingency (8%):	$77,603	
Total Off-Site / Shared Site Improvements:		$1,146,523
Total DPW Facility & Off-Site / Shared Site Improvements:		$10,953,859

North East Industrial Road Site

New Building Cost:	$4,589,656	
• Building		
• Mezzanine		
• Sub-Slab Vent System		
Renovated Building Cost:	$732,660	
• Building		
• Sub-Slab Vent System		
Industrial Equipment and Fueling:	$715,000	
Site Development & Support Structure Costs:	$1,154,375	
Design Contingency (3%)	$215,751	
Subtotal Construction Cost:		$7,407,442
Site Acquisition Costs:	$1,250,000	
Owner Administrative Costs:	$875,127	
• A&E fees		
• Furnishings		
• Communication/low voltage system		
• Printing/advertisement		
• Test & inspections		
Construction Contingency (8%):	$592,595	
Subtotal Administrative and Contingency:		$2,717,722
Total Project Cost (Based on Average Bid Price):		$10,125,164

The estimates are based on the average bid prices for similar projects completed in the last four years. It should be noted that the recent bidding climate has been favorable and has resulted in the low bids which have been on average 8 - 10% below the average bid price.

Due to the early nature of design for this project, many budget items are based on building costs per square foot and site development costs per acre. The estimate includes a design contingency to encompass design adjustments identified during design development. In addition, the estimate includes a construction contingency to account for potential unforeseen conditions uncovered during construction. Copies of the conceptual cost estimates have been included in **Section 10** of this report.

Portions of the multi-million dollar fleet are stored outdoors due to limited space

Rented facility is undersized resulting in staff operating out of temporary trailers

Interior vehicle/equipment storage is inefficient due to a single access aisle which is only accessible by one overhead door

Inefficient single overhead door access to vehicle/equipment storage, workshops, material storage, and vehicle maintenance operations

Storage facilities lack proper interior drainage resulting in unsafe work conditions during the winter months. Excess water can only be removed by a small floor vacuum truck.

Inadequately sized workshop space

Inadequate employee facilities; lunch / muster area is located in vehicle maintenance / vehicle storage floor area

Vehicle Maintenance bays and parts storage are undersized to efficiently and safely support the operations

Town of Branford
Department of Public Works
Space Needs Summary
September 19, 2011

Building Requirements

Area	Description	Size (SF)	Ref #	Sheet No.	Room / Area Dimensions length	width	size
Office & Office Support Areas	Vestibule/Waiting/Reception	324	A7.05	1	18	18	324
	Administration Area (2 Admin Staff)	320	A8.05	1	16	20	320
	DPW Director	270	A1.02	2	15	18	270
	Highway Supervisor	180	A1.05	2	12	15	180
	Copy/File/Mail Area	390	A9.03	2	15	26	390
	Active File Storage	196	C7.03	3	14	14	196
	Archive File Storage	196	C7.03**	3	14	14	196
	Conference Room	192	A10.04	3	12	16	192
	Administration Lunch Room	180	B2.08	3	12	15	180
	Supply Closet	120	A11.01	4	10	12	120
	Telephone / Data Room	100	C11.01	4	10	10	100
	General Closet (Qty 2)	80	A11.02	4	4	20	80
	Janitor Closet	36	A11.01	4	6	6	36
	Admin Toilet Facilities	150	B3.01	4	7.5	20	150
	Subtotal:	2,734					
	Area Grossing Factor (10%):	273					
	Circulation (15%):	451					
	TOTAL:	**3,459**					
Employee Facilities	Male Locker/Shower/Toilet	840	B1.08	5	28	30	840
	Female Locker/Shower/Toilet	180	B1.13	5	10	18	180
	Workforce Lunch Room	700	B2.05	6	25	28	700
	Storm Event / Training Room	770	B4.06	7	22	35	770
	Shared Foreman Office (Hwy. BBG, BOE)	384	A2.02 **	8	16	24	384
	Main Electric Room	150	B5.01	8	10	15	150
	Plumbing/Fire Protection Room	140	B5.02	8	10	14	140
	Subtotal:	3,164					
	Area Grossing Factor (10%):	316					
	Circulation (15%):	522					
	TOTAL:	**4,002**					

Town of Branford
Department of Public Works
Space Needs Summary
September 19, 2011

Building Requirements

Area	Description	Size (SF)	Ref #	Sheet No.	Room / Area Dimensions length	width	size
Work Shops & Material Storage	Sign Shop	400	C2.04	9	20	20	400
	Highway Carpentry Shop	980	C1.05	10	28	35	980
	Shared General Workshop	920	C3.08	11	23	40	920
	BOE Carpentry Shop	1,400	C1.03 *	12	35	40	1,400
	GGB Material Storage Area	576	C5.11	13	24	24	576
	Caged Area for Hand Tools	225	new	13	15	15	225
	General Material Storage Area	880	new	14	22	40	880
	Compressor Room	96	new	13	8	12	96
	Subtotal:	5,477					
	Area Grossing Factor (10%):	548					
	Circulation (10%):	602					
	TOTAL:	**6,627**					
Vehicle Maintenance	Maintenance Fluid Storage	432	D5.06 **	15	18	24	432
	Metal Fabricating / Welding Shop	1,375	D3.01	16	25	55	1,375
	Heavy Equipment Drive-Thru Bay	1,210	D3.01	16	22	55	1,210
	Long Term Heavy Equipment Bay	990	D3.01	16	18	55	990
	Heavy Equipment Bay	990	D3.01	16	18	55	990
	Small Equipment Bay	720	D3.01	16	18	40	720
	Small Equipment Bay	880	D3.01	16	22	40	880
	Hydraulic Hose Workshop	180	C3.21	17	15	12	180
	Maintenance Supervisor Office	144	A2.07	17	12	12	144
	Maintenance Reference Room	120	C8.03	17	10	12	120
	Maintenance Workshop	176	C3.24	18	8	22	176
	Large Tool Storage Area	500	new	18	25	20	500
	Maintenance Tire Storage & Shop	360	C9.06	–	18	20	360
	Battery Charging / Storage Room	100	new	–	10	10	100
	Maintenance Check-in Area	80	new	–	8	10	80
	Parts Storage Room	700	C5.10	20	25	28	700
	Subtotal:	8,957					
	Area Grossing Factor (10%):	896					
	Circulation (10%):	985					
	TOTAL:	**10,838**					

Town of Branford
Department of Public Works
Space Needs Summary
September 19, 2011

Building Requirements

Area	Description	Size (SF)	Ref #	Sheet No.	Room / Area Dimensions length	width	size
Wash Area	Wash Bay	1,375	D 4.03	21	25	55	1,375
	Wash Equipment Room	360	D 4.03	21	18	20	360
	Subtotal:	1,735					
	Area Grossing Factor (5%):	87					
	Circulation:	n/a					
	TOTAL:	**1,822**					
Vehicle and Equipment Storage	Large Vehicle Storage Area	11,454	D3.04	22	83	138	11,454
	Small Vehicle Storage Area	6,474		22	83	78	6,474
	Equipment Storage Area	2,822		23	34	83	2,822
	Subtotal:	20,750					
	Area Grossing Factor (5%):	1,038					
	Circulation:	n/a					
	TOTAL:	**21,788**					

TOTAL:	**48,536**
DPW:	*43,721*
BOE:	*2,238*
GGB:	*2,577*

Possible Reductions based on Industry Standards 7,280 SF
Revised Building Program (SF): 41,256

Staffing	Current	Seasonal	Future
DPW Administration	3		-
Highway Workforce	11	3	-
Highway Vehicle Maintenance Workforce	4		-
Board of Education Workforce	1		-
General Government Building	2		-
Total:	**21**	**3**	**-**

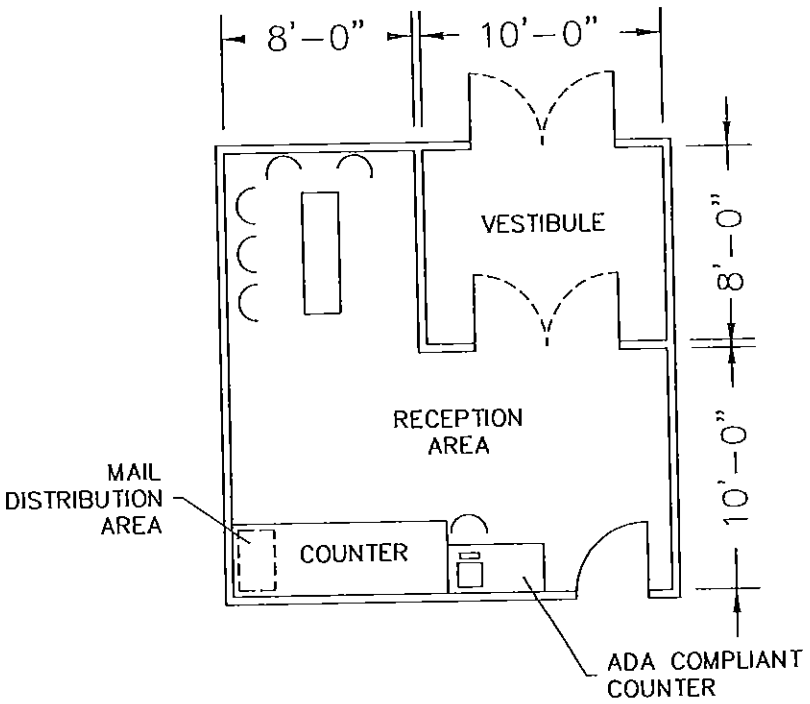

RECEPTION/VESTIBULE/WAITING AREA

18' x 18' = 324 SF

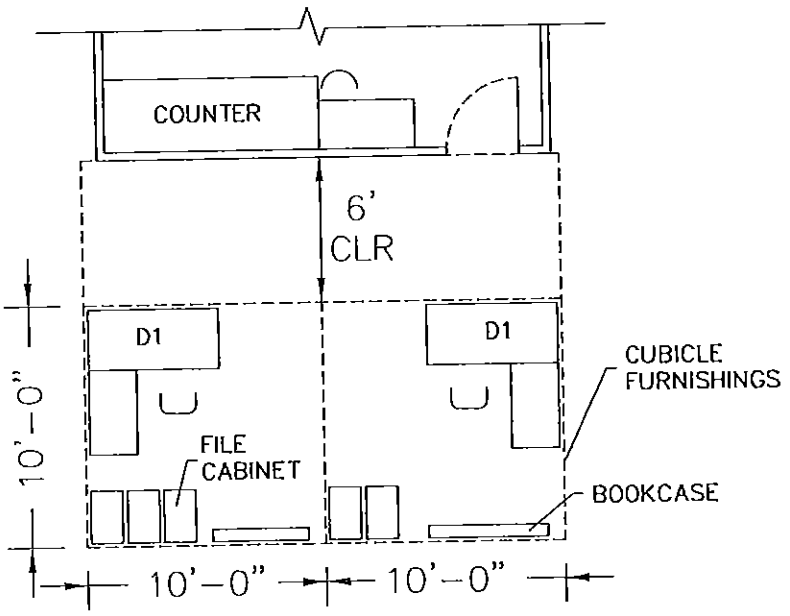

ADMINISTRATION AREA

20' x 16' = 320 SF

SPACE NEEDS ASSESSMENT

Branford, Connecticut

Scale: 1/8"=1'-0"

Sheet 1

WESTON & SAMPSON ENGINEERS, INC.

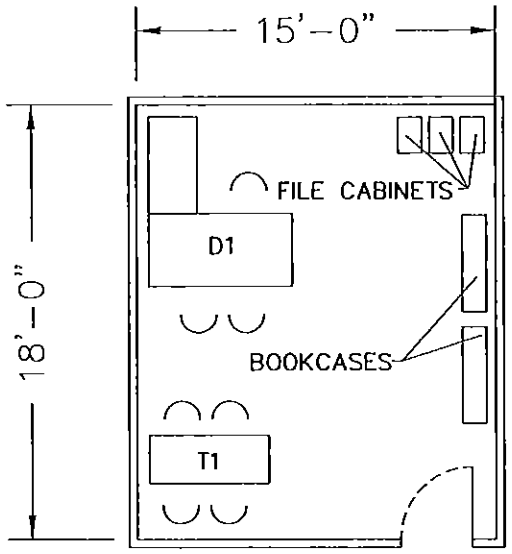

DPW DIRECTOR

15' x 18' = 270 SF

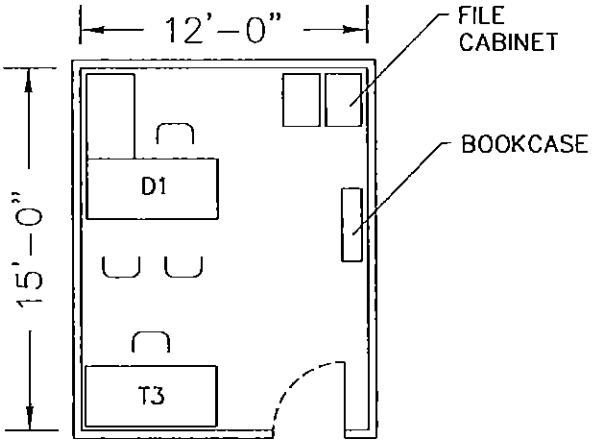

HIGHWAY SUPERVISOR

12' x 15' = 180 SF

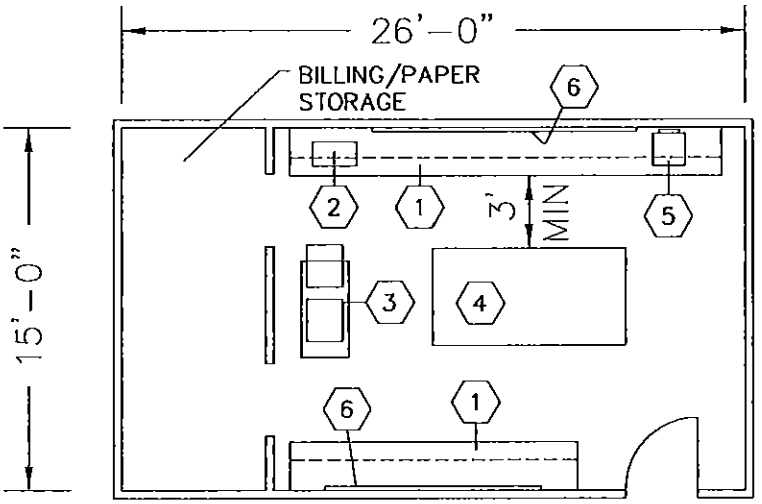

COPY-FILE-MAIL AREA

15' x 26' = 390 SF

1. COUNTER (WITH SHELVING BELOW)
2. STAMP MACHINE
3. COPIER
4. 4'x8' LAYOUT TABLE W/FLAT FILES
5. FAX MACHINE
6. PLUG STRIP

SPACE NEEDS ASSESSMENT

Branford, Connecticut

Scale: 1/8"=1'-0" Sheet 2

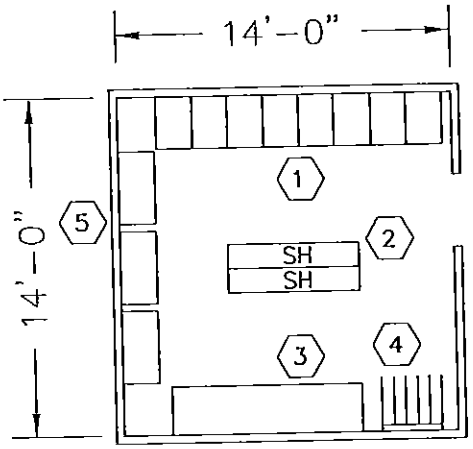

ACTIVE FILE STORAGE

14' x 14' = 196 SF

1. FILE CABINETS
2. HEAVY DUTY SHELVING (1' DEPTH)
3. HEAVY DUTY SHELVING (2' DEPTH)
4. HANGING PLAN FILE
5. LATERAL FILE CABINETS

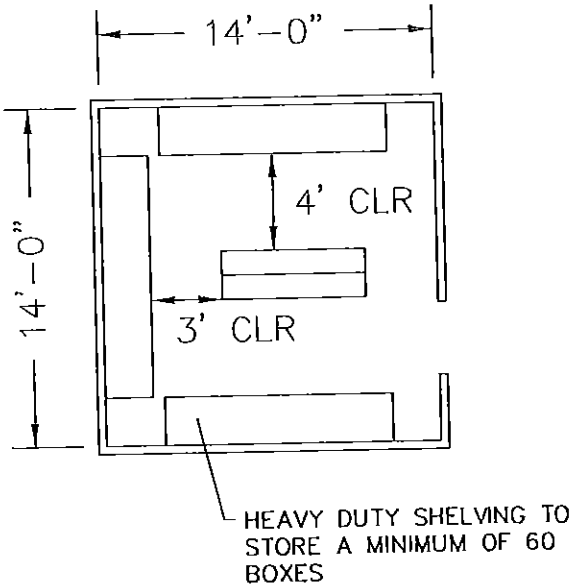

ARCHIVE FILE STORAGE

14' x 14' = 196 SF

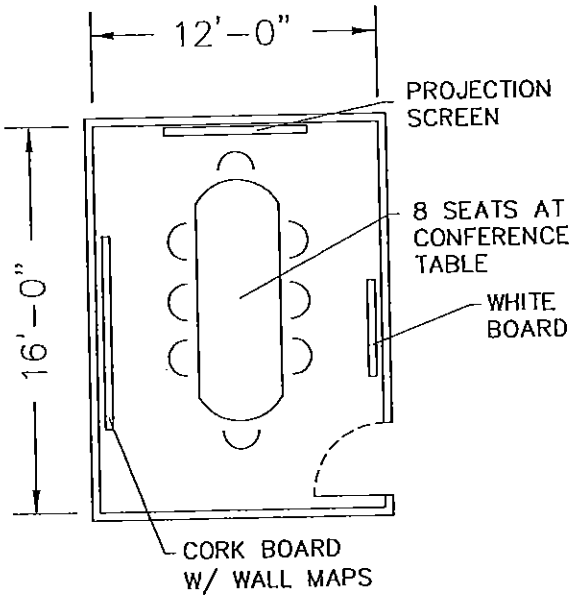

CONFERENCE ROOM

12' x 16' = 192 SF

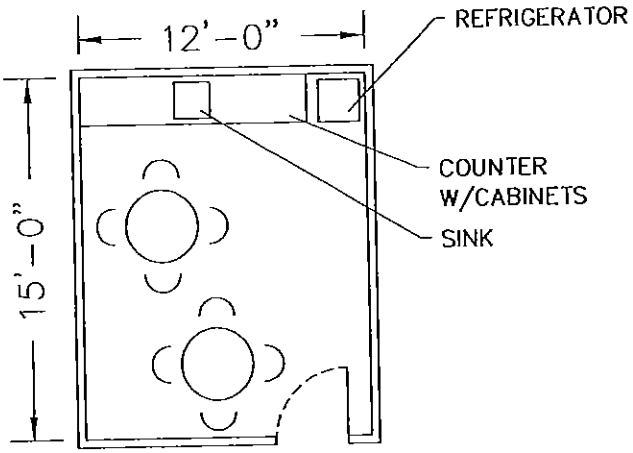

ADMINISTRATION LUNCH ROOM

12' x 15' = 180 SF

SPACE NEEDS ASSESSMENT

Branford, Connecticut

Scale: 1/8"=1'-0"

Sheet 3

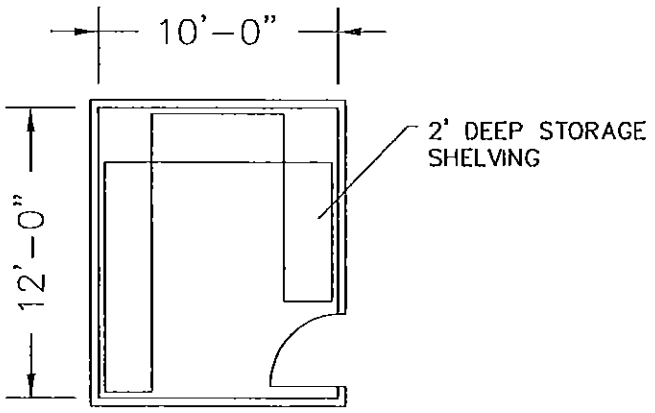

SUPPLY CLOSET

10' x 12' = 120 SF

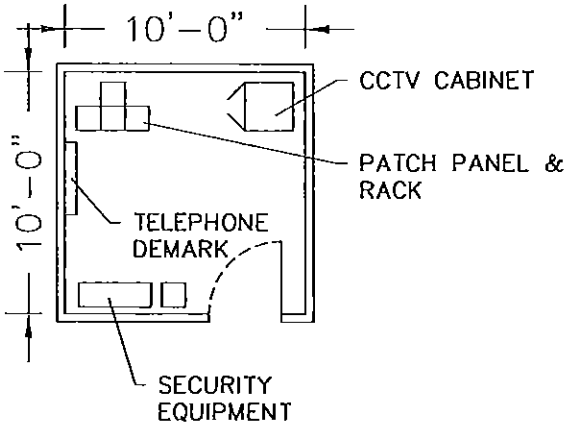

TELEPHONE/DATA ROOM

10' x 10' = 100 SF

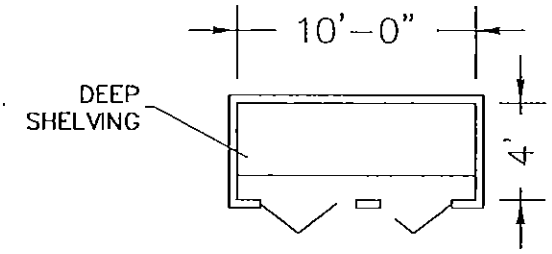

GENERAL CLOSET (QTY 2)

10' x 4' = 40 SF
10' x 4' = 40 SF

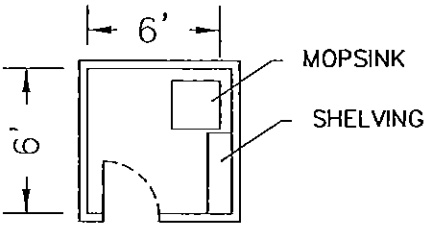

JANITOR CLOSET

6' x 6' = 36 SF

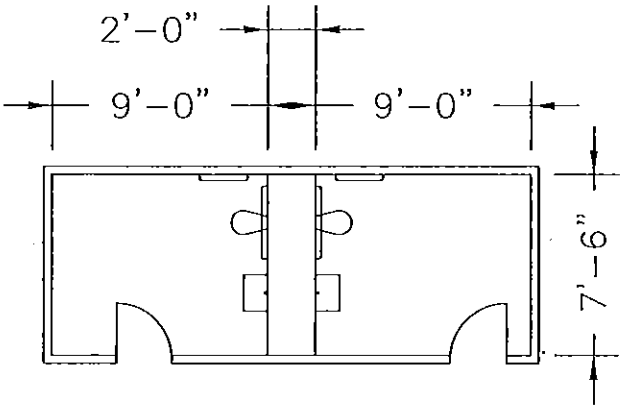

ADMINISTRATION TOILET FACILITIES

7'-6" x 20' = 150 SF

SPACE NEEDS ASSESSMENT

Branford, Connecticut

Scale: 1/8"=1'-0"

Sheet 4

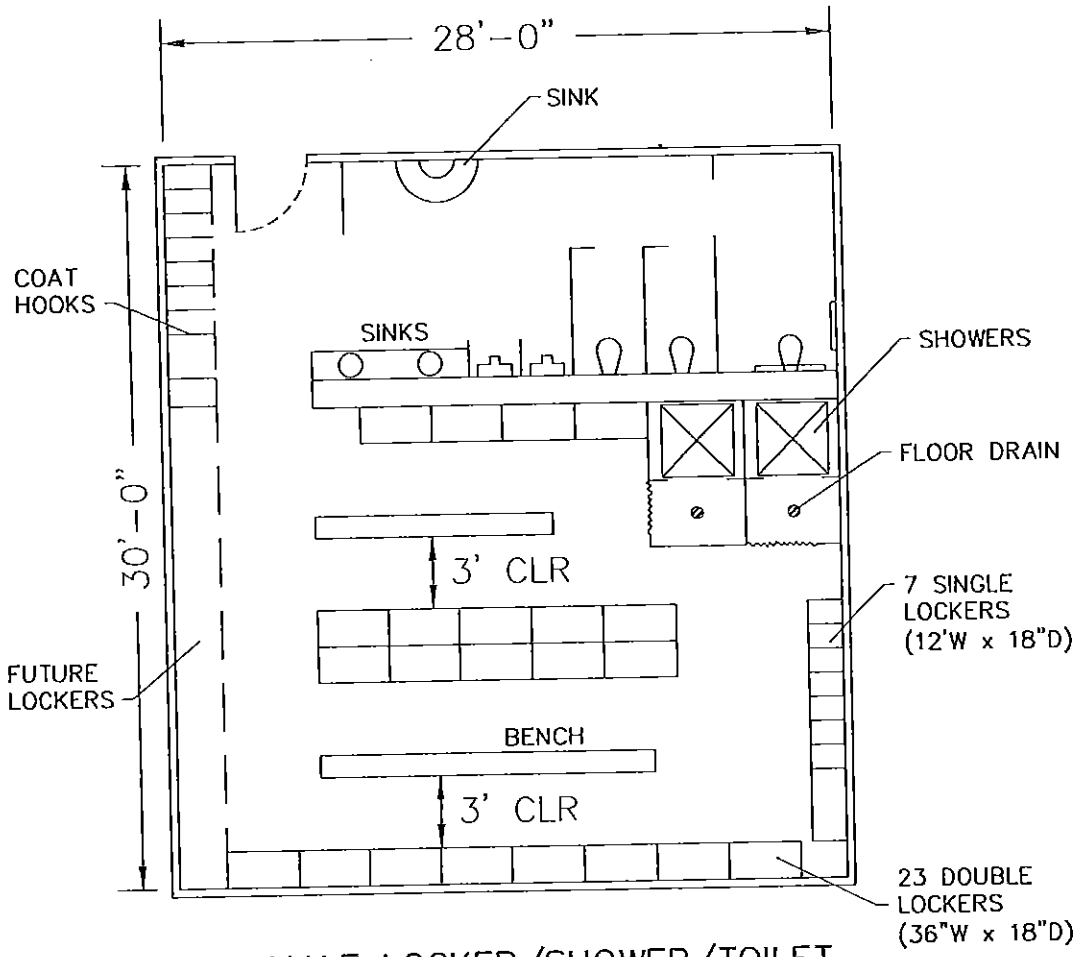

MALE LOCKER/SHOWER/TOILET
28' x 30' = 840 SF

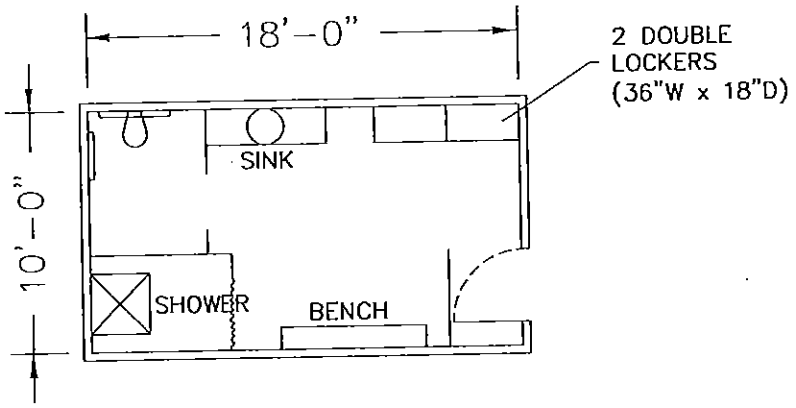

FEMALE LOCKER/SHOWER/TOILET
10' x 18' = 180 SF

SPACE NEEDS ASSESSMENT

Branford, Connecticut

Scale: 1/8"=1'-0" Sheet 5

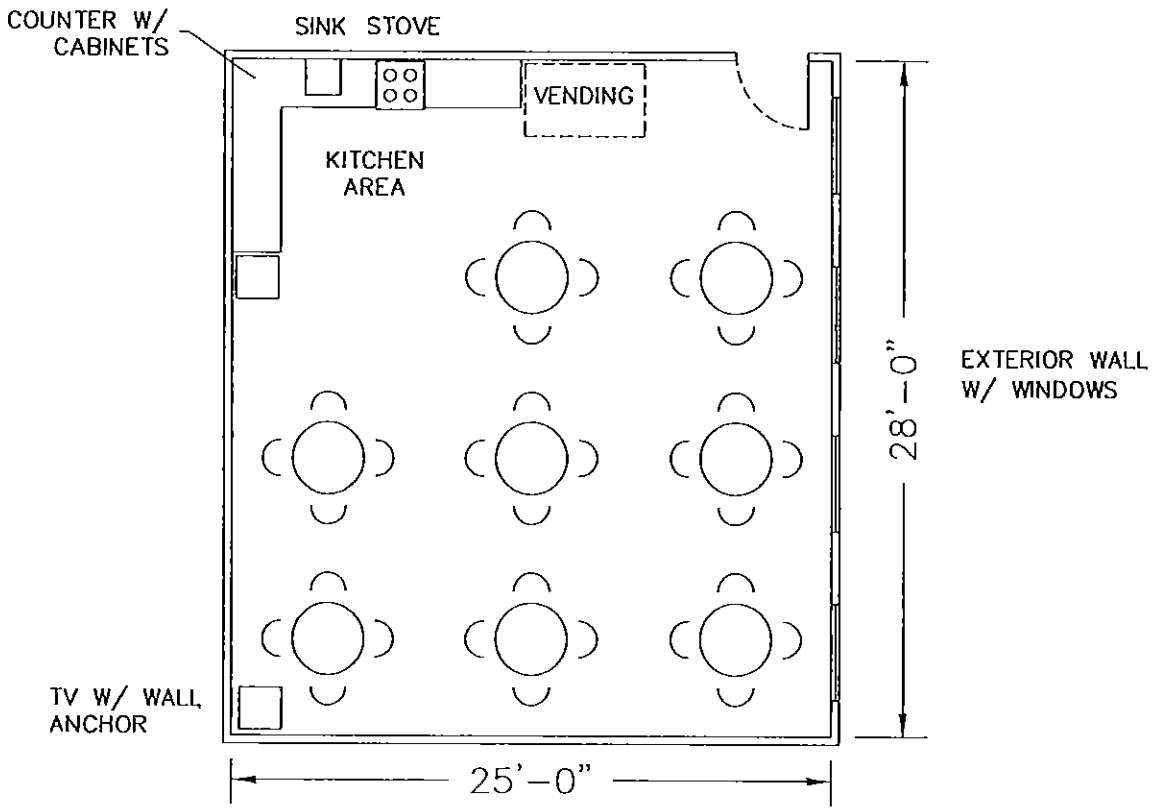

WORK FORCE LUNCH ROOM

25' x 28' = 700 SF

SPACE NEEDS ASSESSMENT

Branford, Connecticut

Scale: 1/8"=1'-0"

Sheet 6

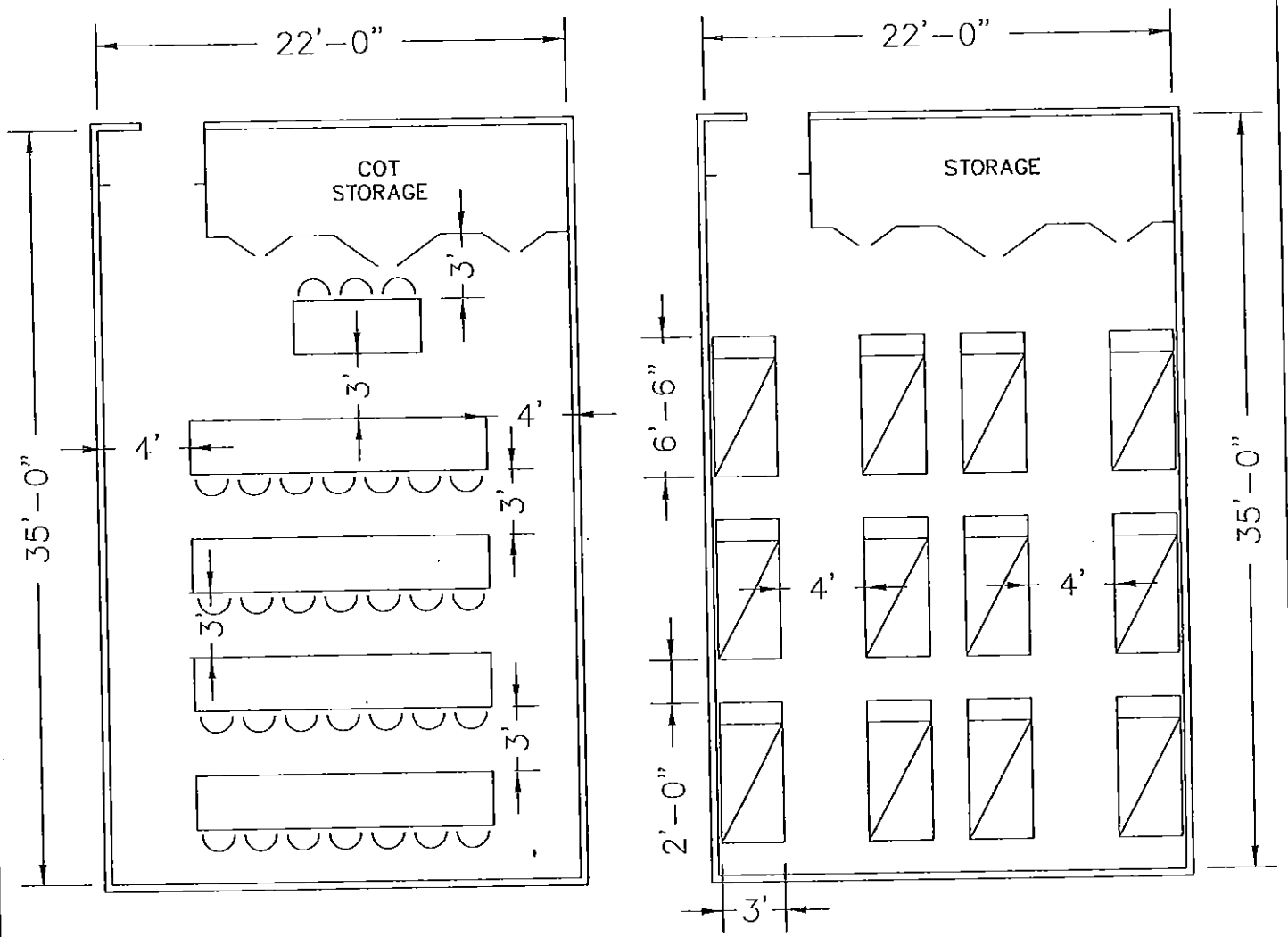

TRAINING ROOM SETUP

22' x 35' = 770 SF

SIZED TO ACCOMMODATE 28 EMPLOYEES FOR TRAINING AT ONE TIME

STORM EVENT SETUP

22' x 35' = 770 SF

SIZED TO ACCOMMODATE UP TO 12 COTS FOR EXTENDED STORM EVENTS

STORM EVENT/TRAINING ROOM

22' x 35' = 770 SF

SPACE NEEDS ASSESSMENT

Branford, Connecticut

Scale: 1/8"=1'-0" Sheet 7

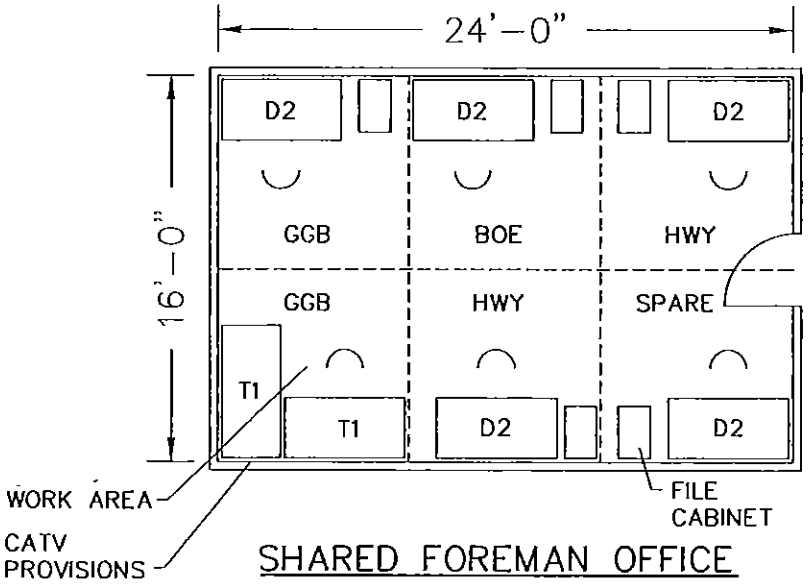

GGB: GENERAL GOVERNMENT BUILDINGS

BOE: BOARD OF EDUCATION

HWY: HIGHWAY

SHARED FOREMAN OFFICE

16' x 24' = 384 SF

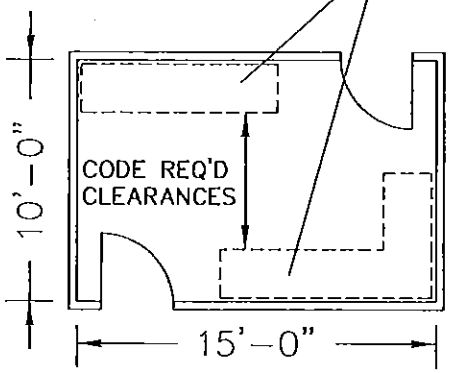

MAIN ELECTRIC ROOM

10' x 15' = 150 SF

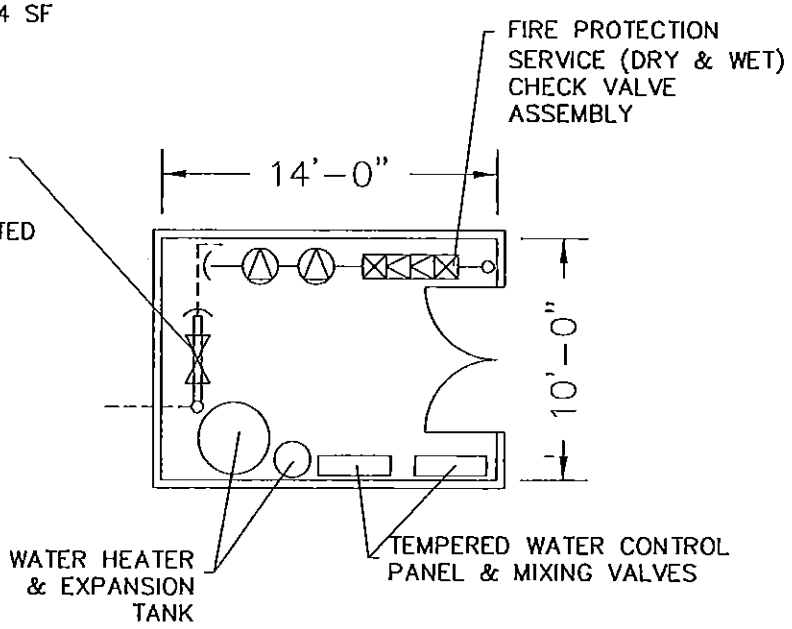

PLUMBING/FIRE PROTECTION ROOM

10' x 14' = 140 SF

SPACE NEEDS ASSESSMENT

Branford, Connecticut

Scale: 1/8"=1'-0" Sheet 8

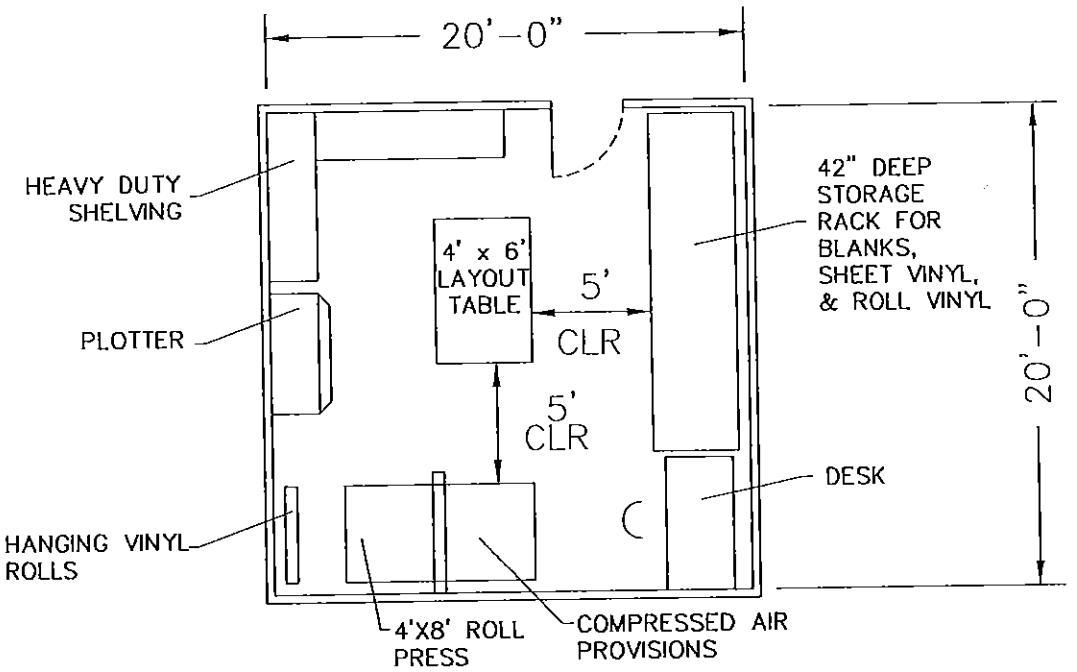

SIGN SHOP

20' x 20' = 400 SF

SPACE NEEDS ASSESSMENT

Branford, Connecticut

Scale: 1/8"=1'-0"

Sheet 9

WESTON & SAMPSON ENGINEERS, INC.

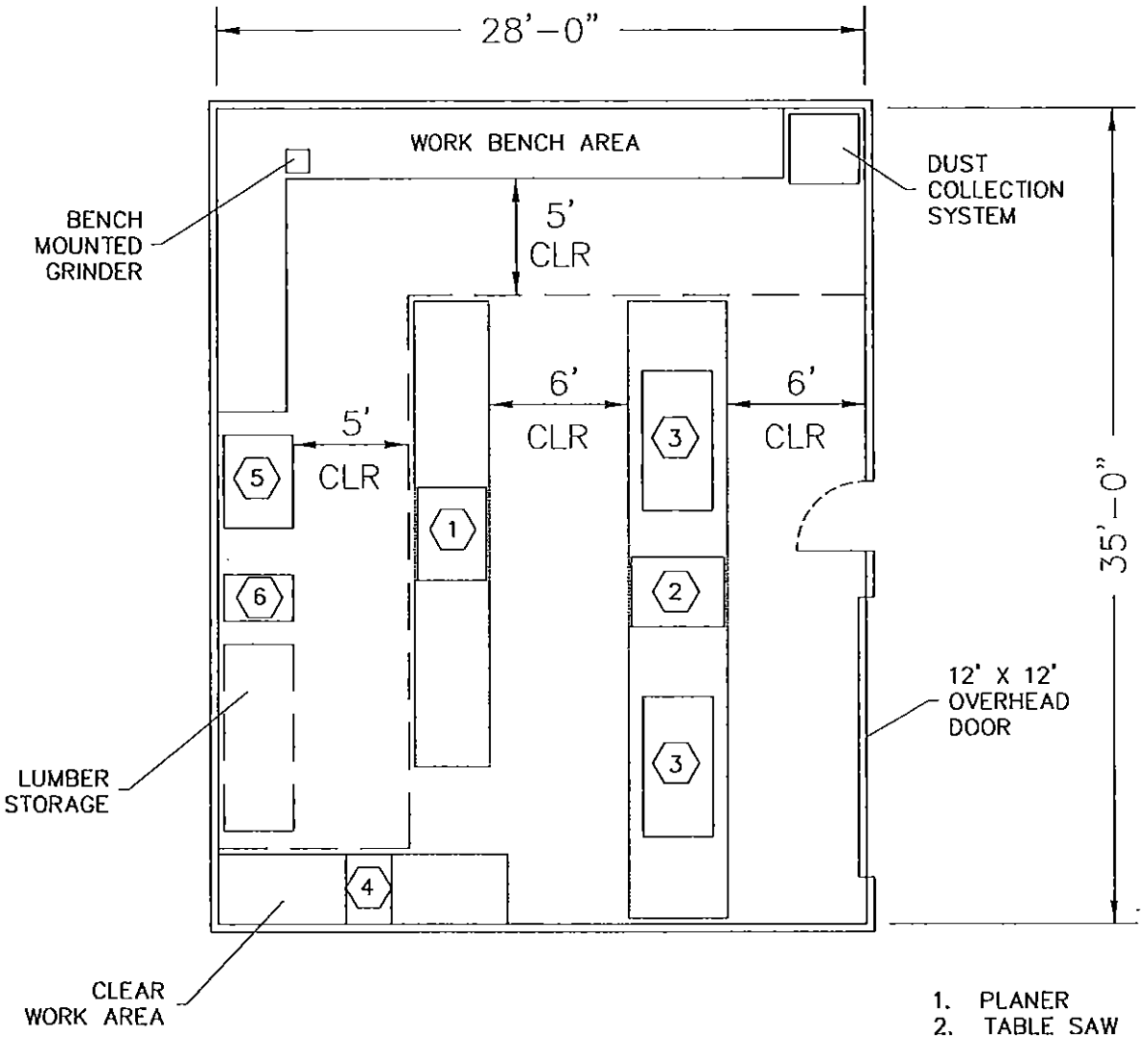

HIGHWAY CARPENTRY SHOP

28' x 35' = 980 SF

1. PLANER
2. TABLE SAW
3. WORK BENCH
4. RADIAL ARM SAW
5. JOINTER
6. DRILL PRESS

SPACE NEEDS ASSESSMENT

Branford, Connecticut

Scale: 1/8"=1'-0" Sheet 10

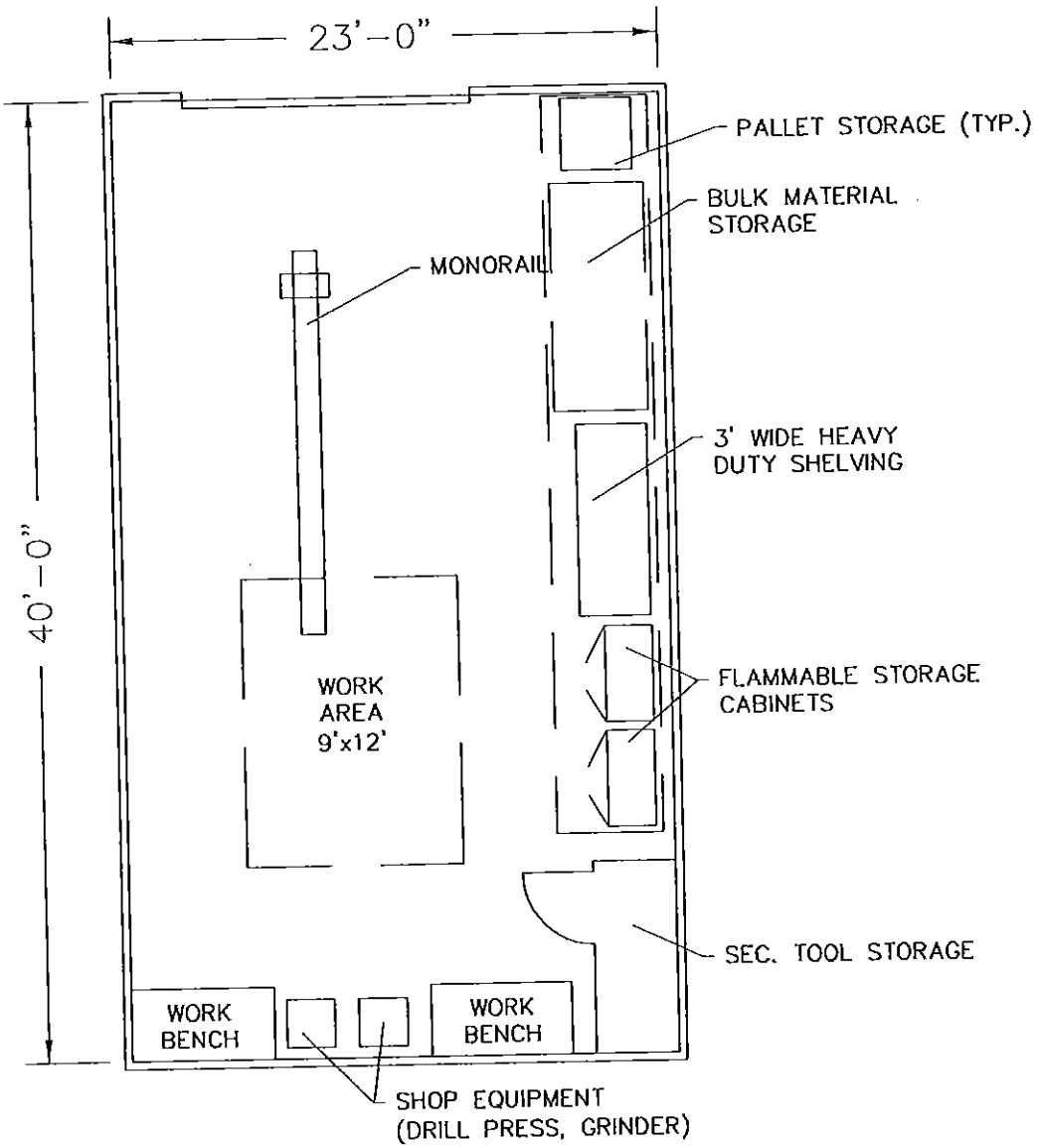

SHARED GENERAL WORKSHOP

23' x 40' = 920 SF

SPACE NEEDS ASSESSMENT

Branford, Connecticut

Scale: 1/8"=1'-0"

Sheet 11

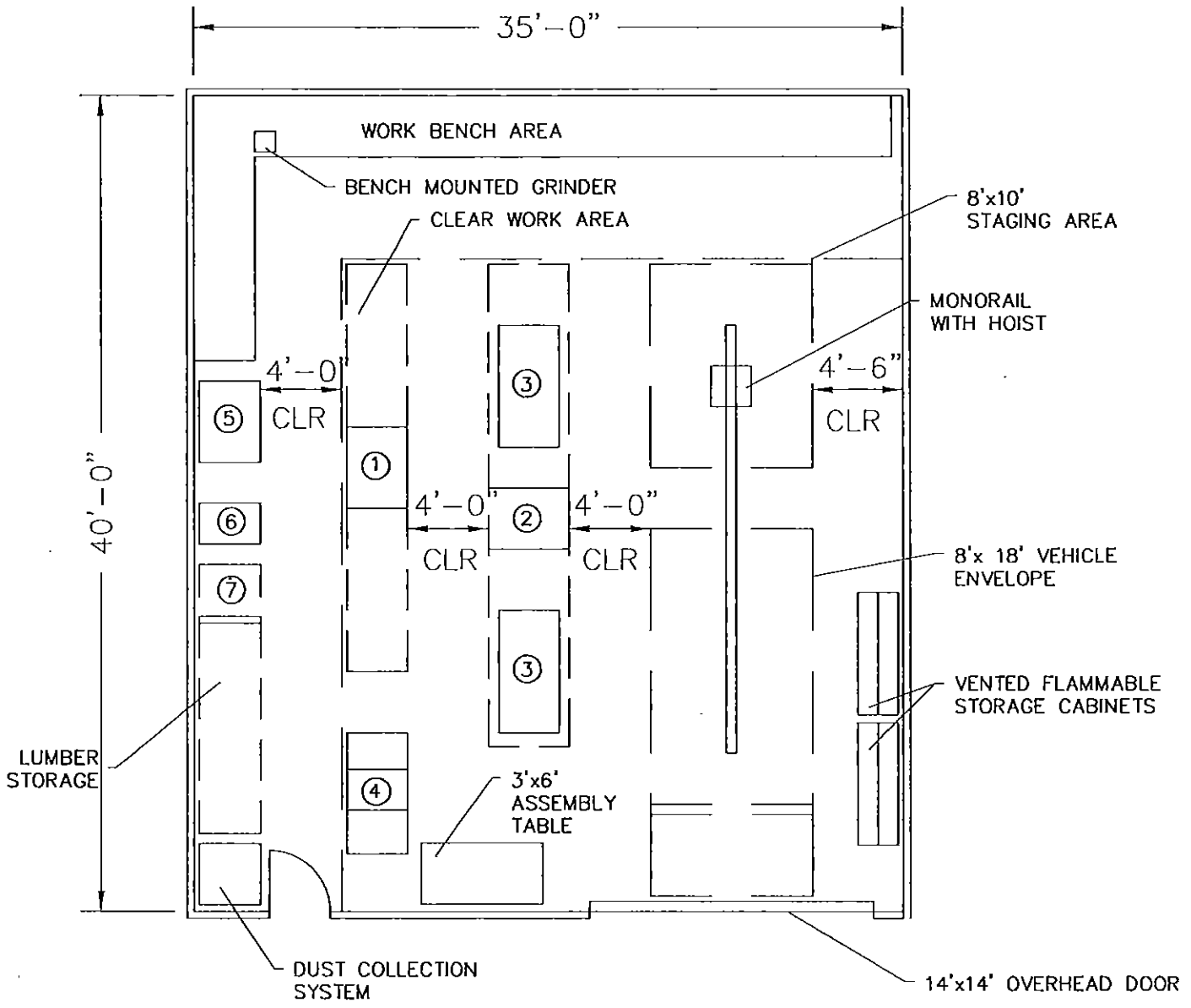

BOE CARPENTRY SHOP

35' x 40' = 1400 SF

SPACE NEEDS ASSESSMENT

Branford, Connecticut

Scale: 1/8"=1'-0" Sheet 12

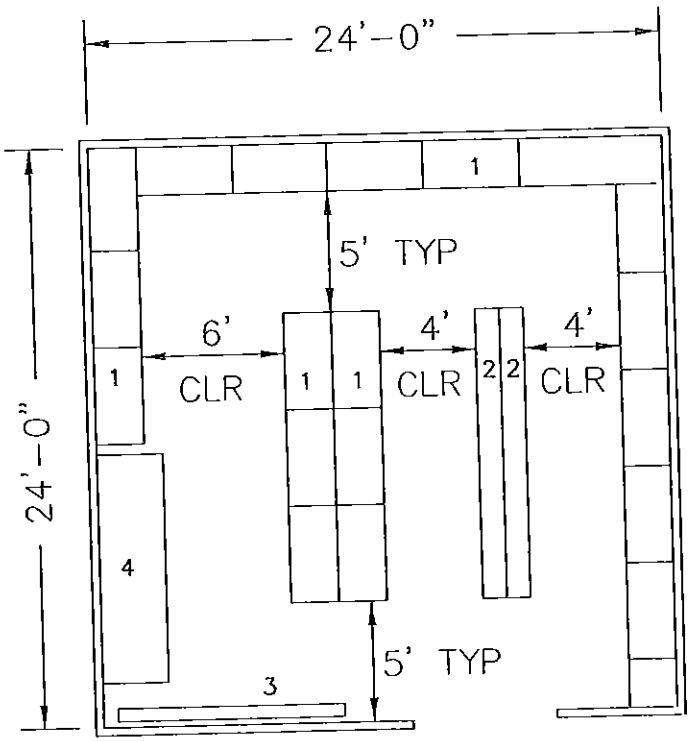

MATERIAL STORAGE AREA (GGB)

24' x 24' = 576 SF

NOTES:

1. 24" HEAVY DUTY SHELVING
2. SMALL PARTS BIN
3. WALL STORAGE (HANGING HOSES, BELTS, ETC.)
4. BULK FLOOR STORAGE

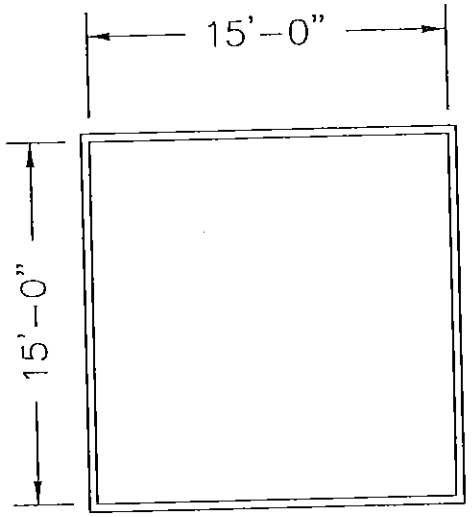

CAGED AREA FOR HAND TOOLS

15' x 15' = 225 SF

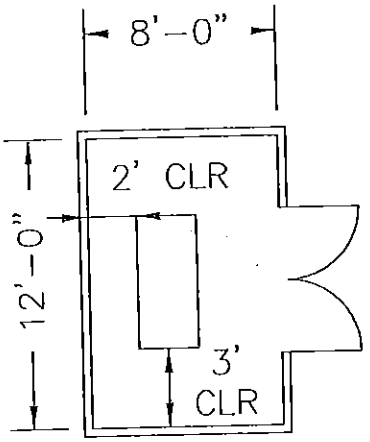

COMPRESSOR ROOM

8' x 12'

SPACE NEEDS ASSESSMENT

Branford, Connecticut

Scale: 1/8"=1'-0"

Sheet 13

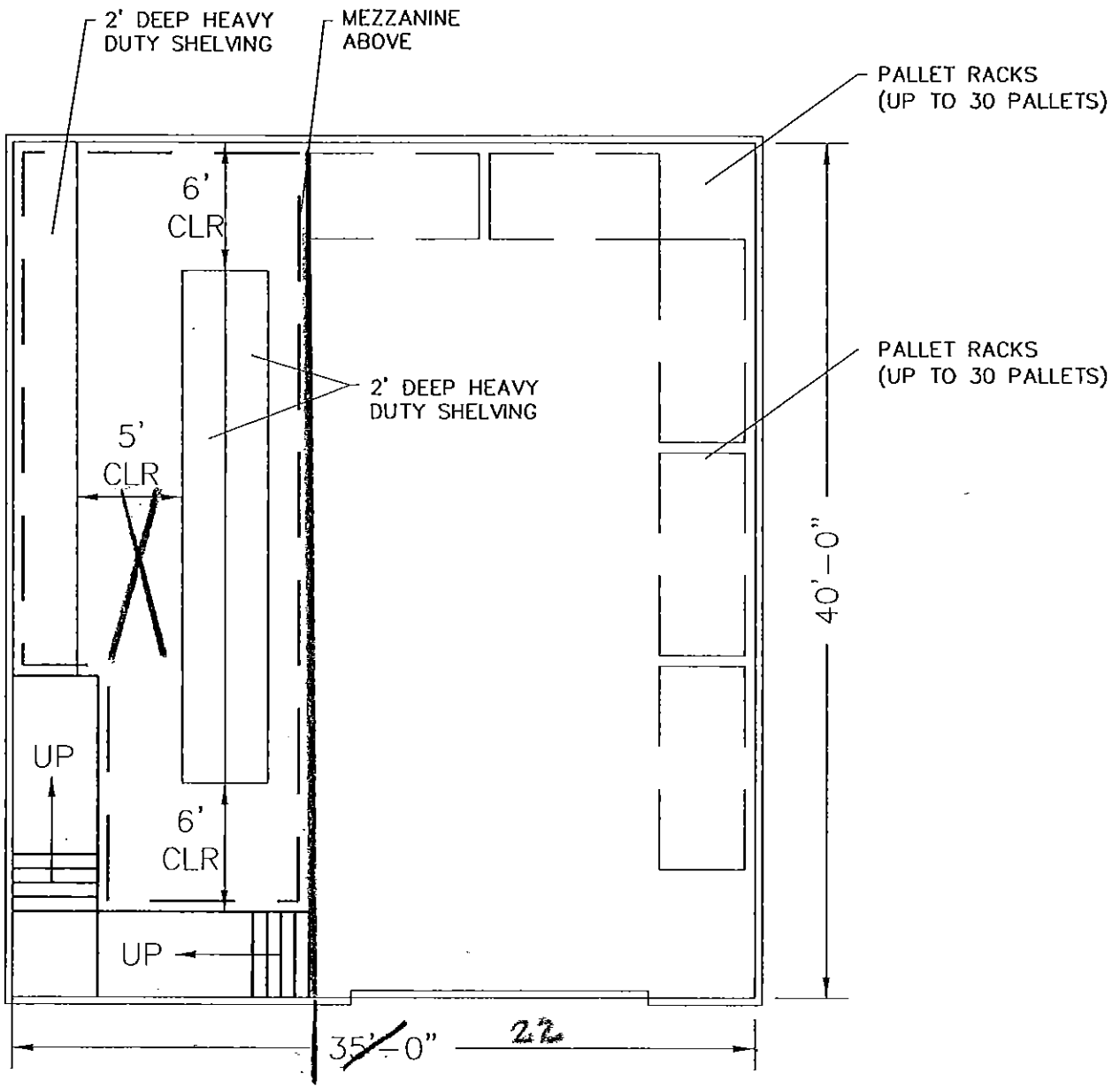

GENERAL MATERIAL STORAGE AREA

~~35'~~ x 40' = ~~1400~~ SF

22 880

SPACE NEEDS ASSESSMENT

Branford, Connecticut

Scale: 1/8"=1'-0" Sheet 14

WESTON & SAMPSON ENGINEERS, INC.

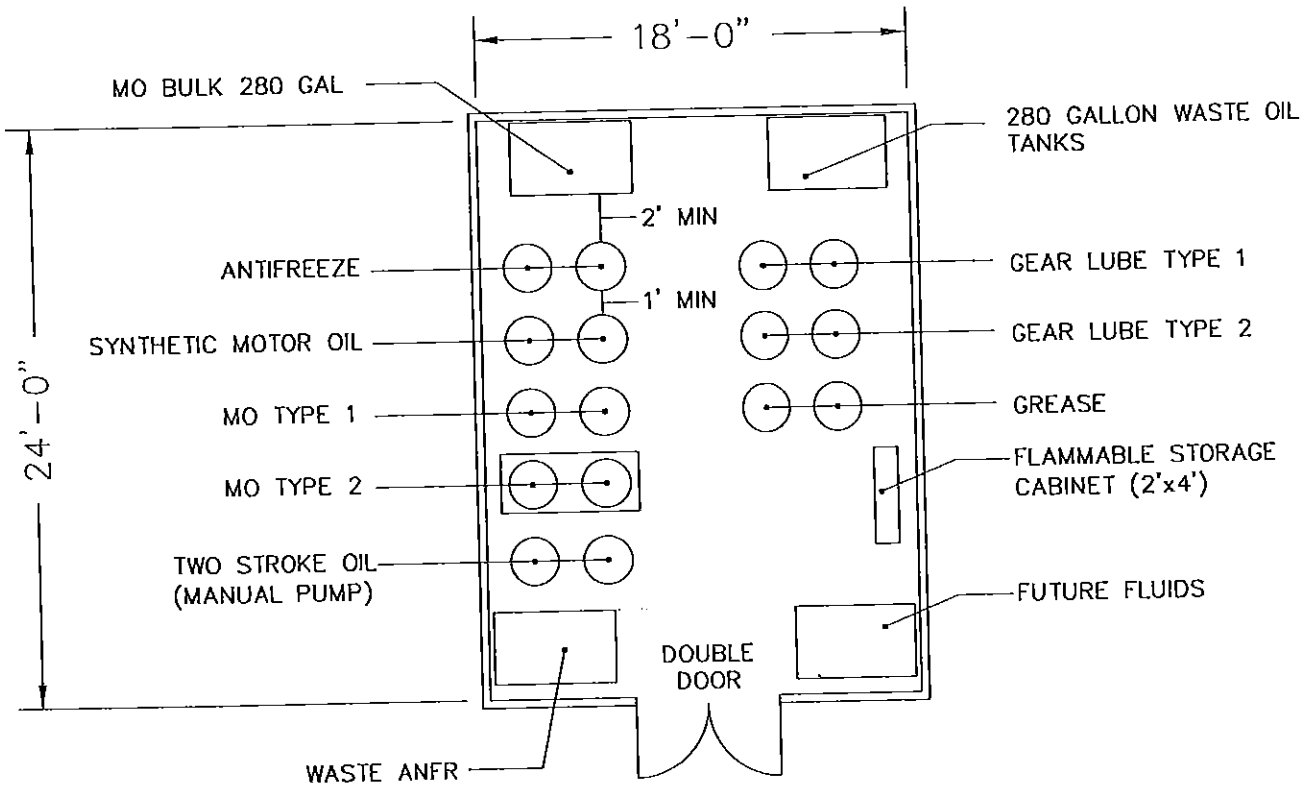

MAINTENANCE FLUID STORAGE

18' x 24' = 432 SF

NOTES:

1. ALL BULK TANKS ARE DOUBLE-WALL ABOVE GROUND
2. DEPRESS FLOOR 12"
3. WATER STOPS AT FLOOR/WALL INTERSECTION
4. 2-HOUR RATE ROOM (WALLS,CEILING,DOOR)
5. MOUNT AIR OPERATED PUMPS ALONG WALL

SPACE NEEDS ASSESSMENT

Branford, Connecticut

Scale: 1/8"=1'-0" Sheet 15

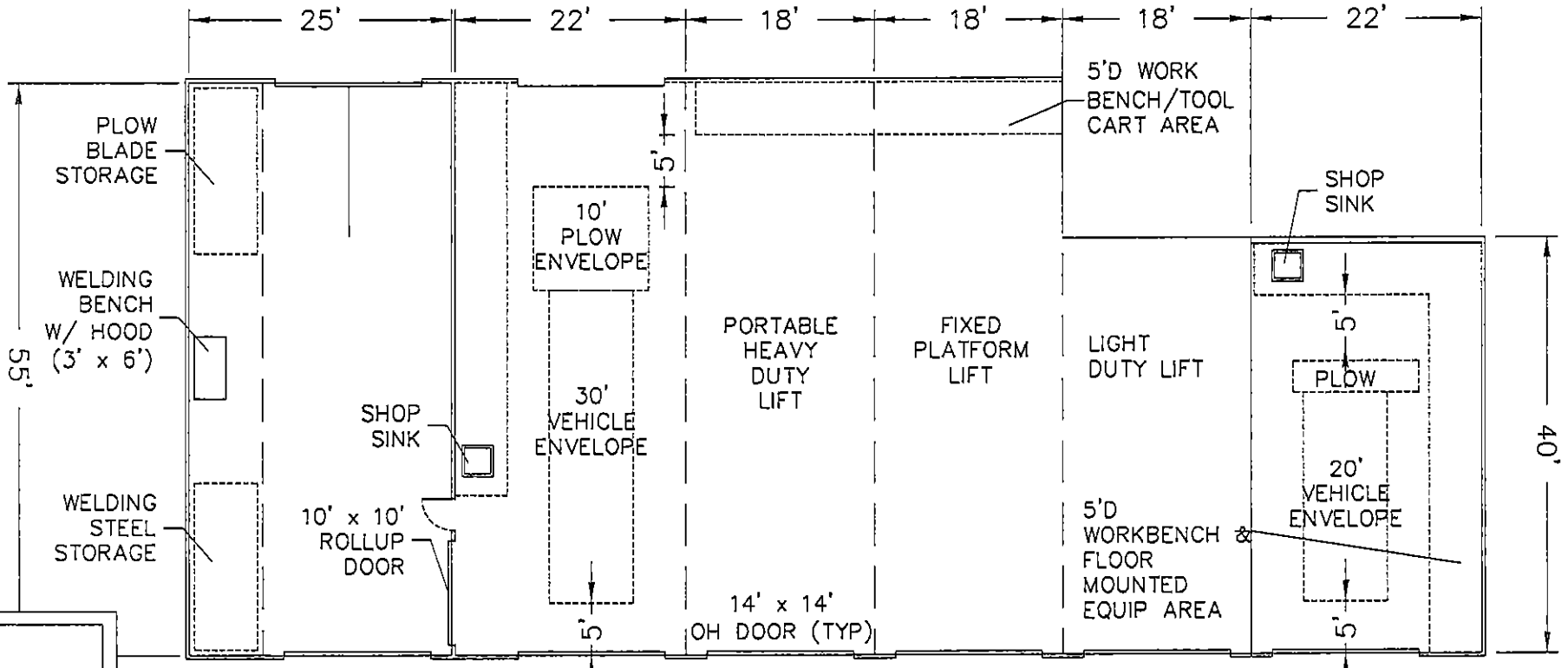

VEHICLE / EQUIPMENT MAINTENANCE BAYS

NOTES:
1. PROVIDE OVERHEAD TAILPIPE EXHAUST SYSTEM
2. PROVIDE LUBRICATION DISTRIBUTION SYSTEM
3. PROVIDE 3-BAY BRIDGE CRANE
4. PROVIDE HEAVY DUTY FIXED LIFT, HEAVY DUTY PORTABLE LIFT, AND LIGHT DUTY LIFT

SPACE NEEDS ASSESSMENT

Branford, Connecticut

Scale: 1/16"=1'-0"

Sheet 16

WESTON & SAMPSON ENGINEERS, INC.

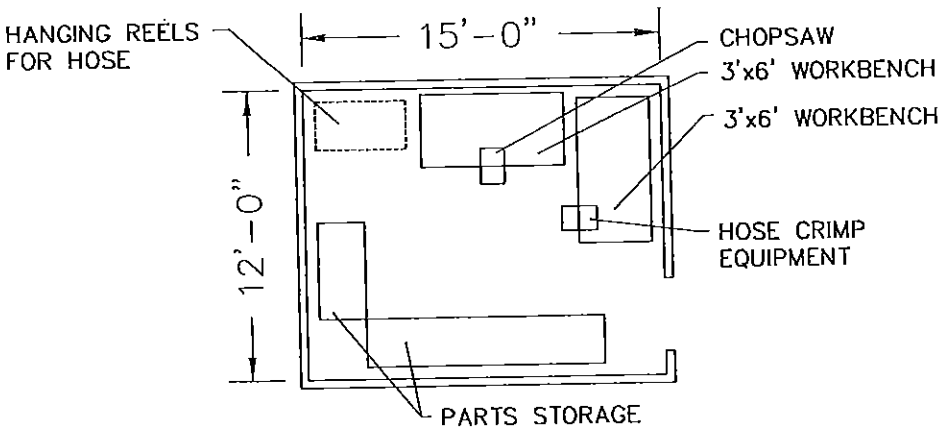

HYDRAULIC HOSE WORKSHOP

12' x 15' = 180 SF

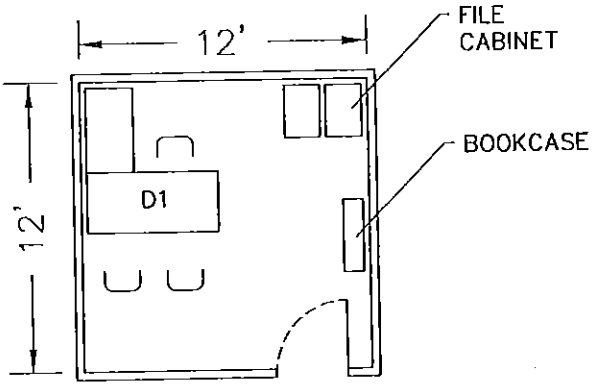

MAINTENANCE SUPERVISOR OFFICE

12' x 12' = 144 SF

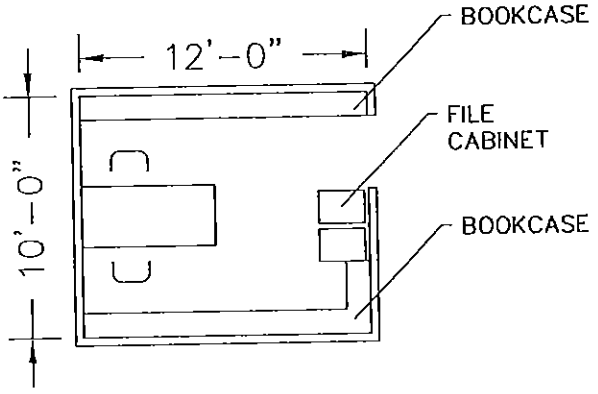

MAINTENANCE REFERENCE ROOM

12' x 10' = 120 SF

SPACE NEEDS ASSESSMENT

Branford, Connecticut

Scale: 1/8"=1'-0"

Sheet 17

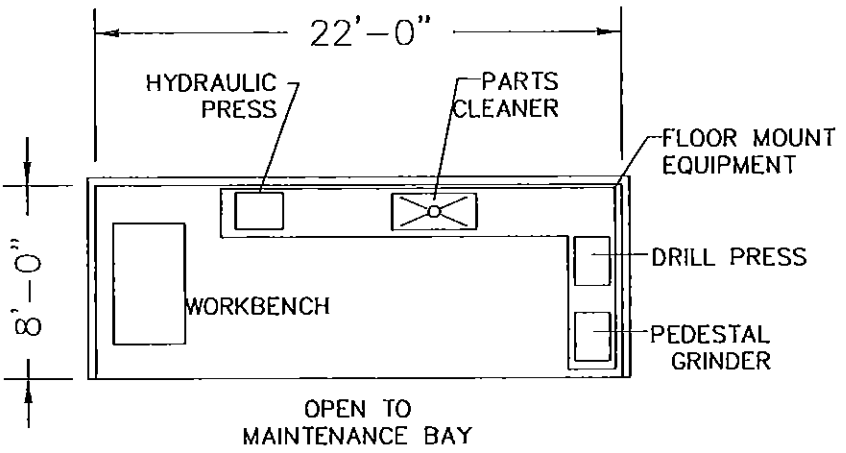

MAINTENANCE WORKSHOP

8' X 22' = 176 S.F.

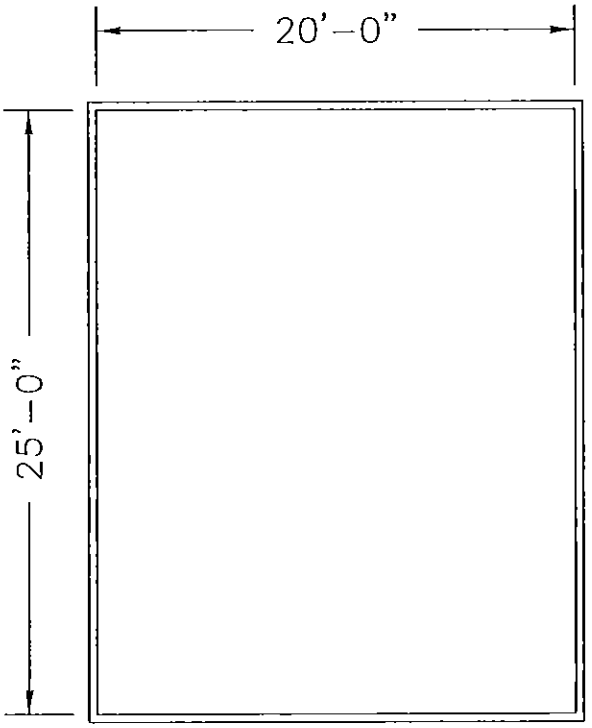

LARGE TOOL STORAGE AREA

20' X 25' = 500 S.F.

SPACE NEEDS ASSESSMENT

Branford, Connecticut

Scale: 1/8"=1'-0" Sheet 18

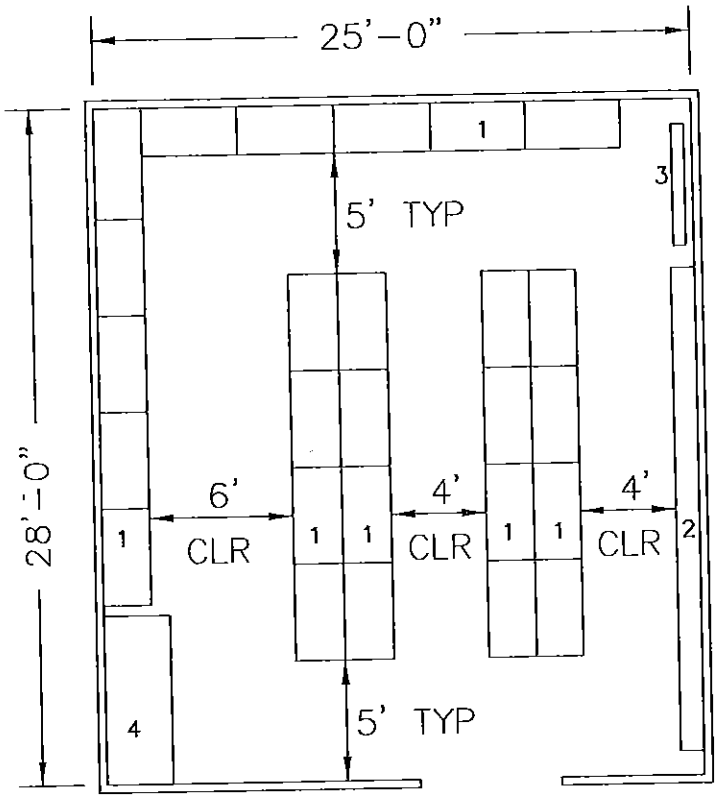

PARTS STORAGE ROOM

25' x 28' = 700 SF

NOTES:

1. 24" HEAVY DUTY SHELVING
2. SMALL PARTS BIN
3. WALL STORAGE (HANGING HOSES, BELTS, ETC.)
4. BULK FLOOR STORAGE
5. PROVIDE MIN. 1 – 24"x48" SHELF PER VEHICLE

SPACE NEEDS ASSESSMENT

Branford, Connecticut

Scale: 1/8"=1'-0" Sheet 20

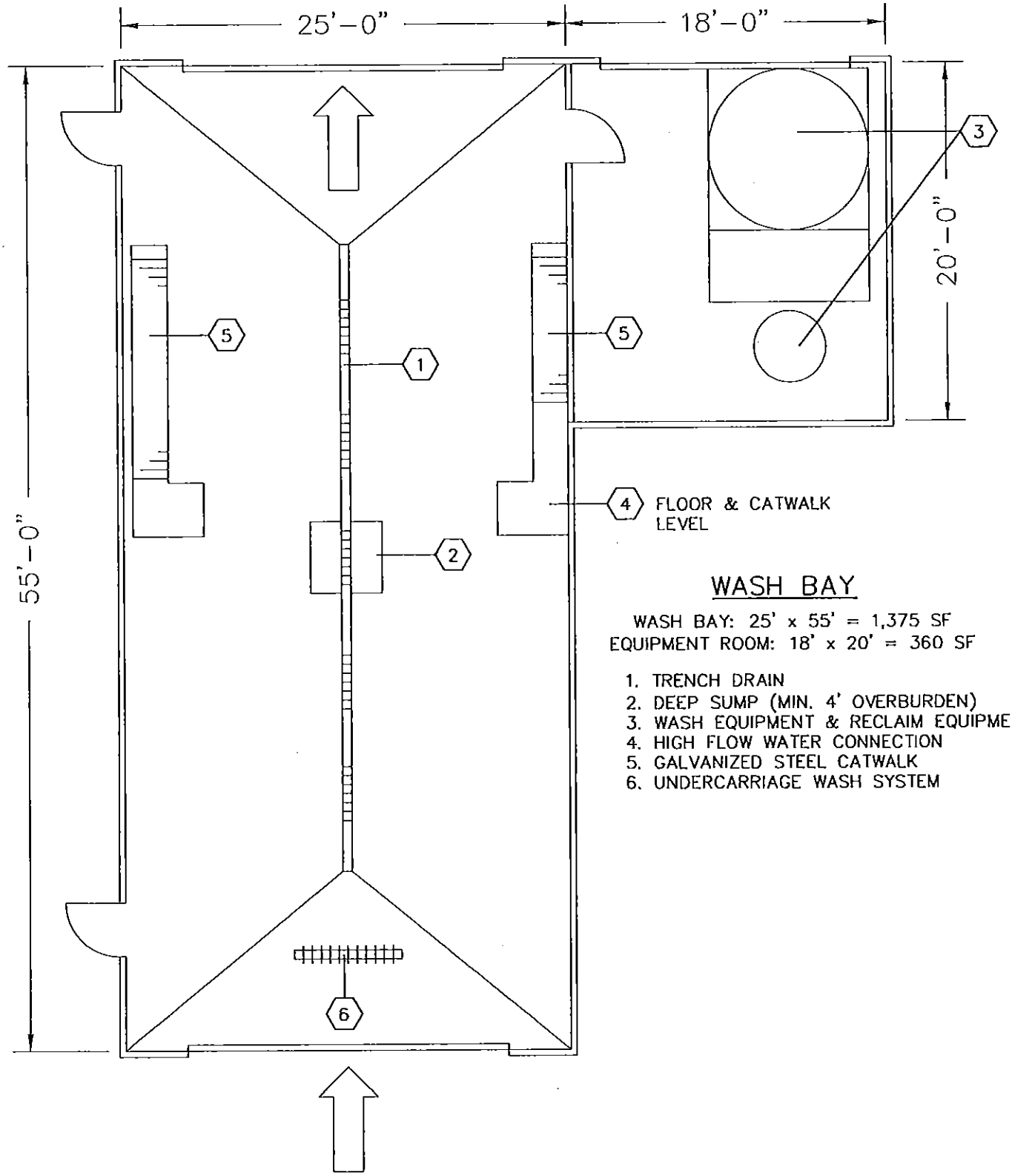

4 FLOOR & CATWALK LEVEL

WASH BAY

WASH BAY: 25' x 55' = 1,375 SF
EQUIPMENT ROOM: 18' x 20' = 360 SF

1. TRENCH DRAIN
2. DEEP SUMP (MIN. 4' OVERBURDEN)
3. WASH EQUIPMENT & RECLAIM EQUIPMENT
4. HIGH FLOW WATER CONNECTION
5. GALVANIZED STEEL CATWALK
6. UNDERCARRIAGE WASH SYSTEM

SPACE NEEDS ASSESSMENT

Branford, Connecticut

Scale: 1/8"=1'-0" Sheet 21

Weston&Sampson Engineers, Inc. Innovative Solutions since 1899	PROJECT: BRANFORD	DATE: 9/2011	PAGE: 22
		BY: JJA	
		CHKD. BY: DJS	

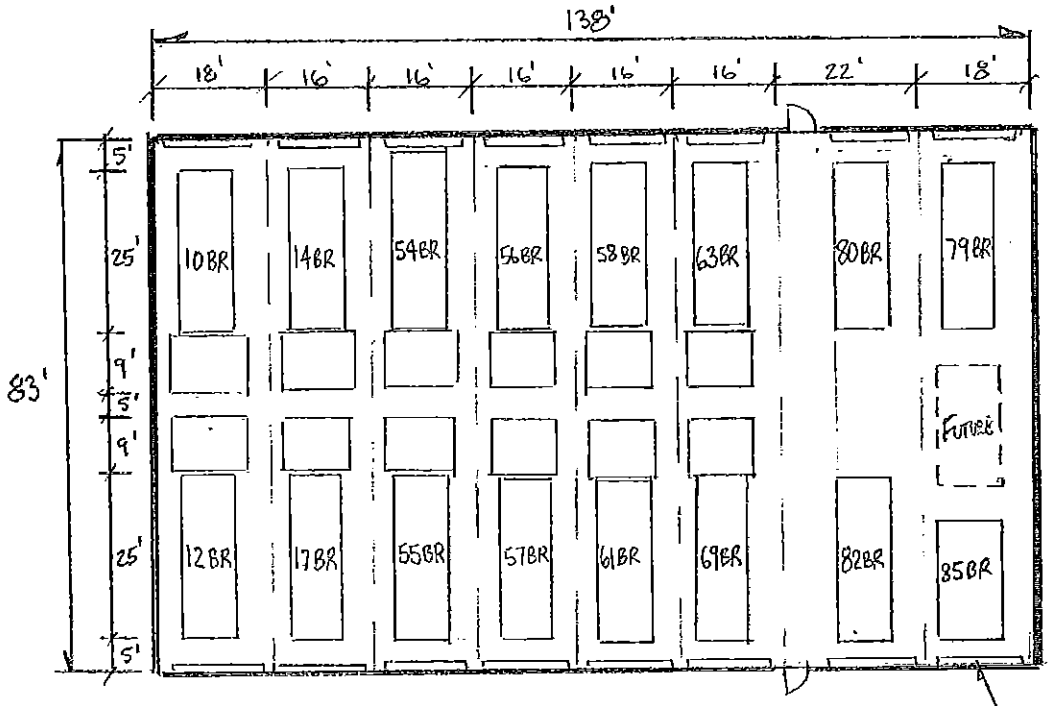

LARGE VEH STORAGE

83'x138' = 11,454 SF

14'x14' OVERHEAD SECTIONAL DOOR (TYP)

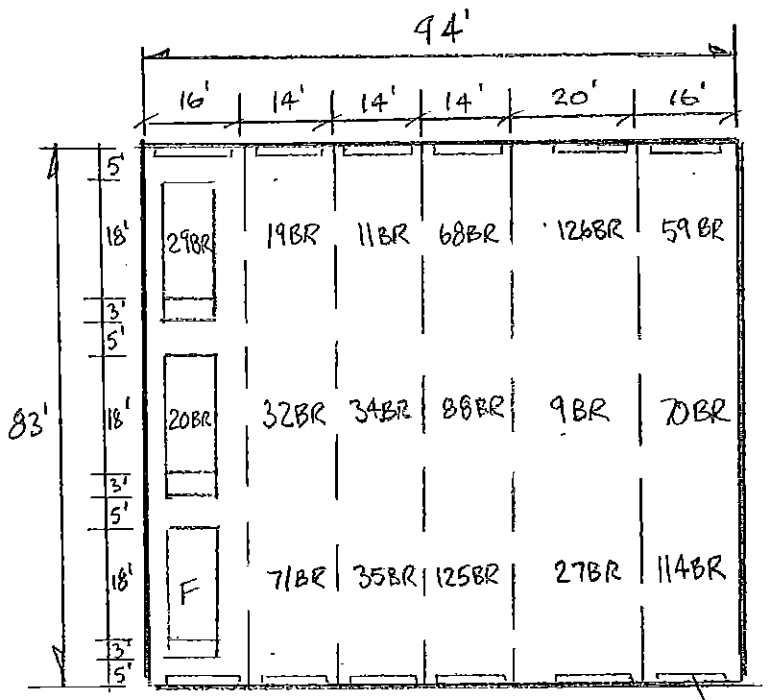

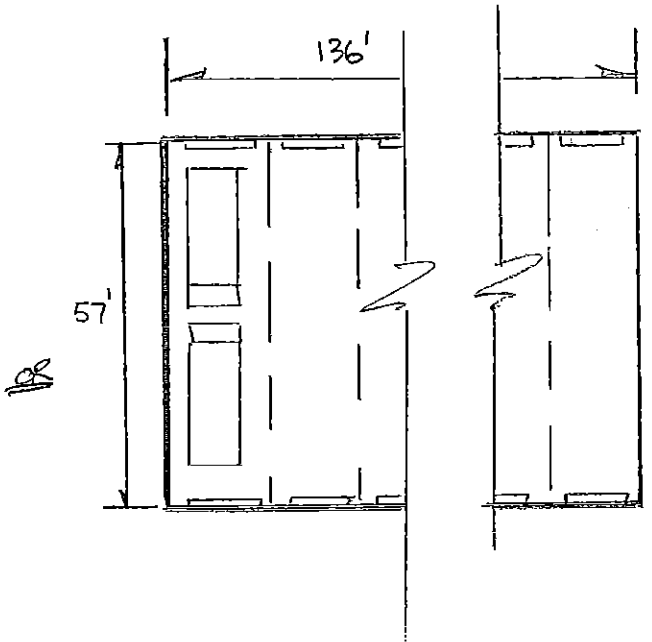

12'x12' OVERHEAD SECTIONAL DOORS (TYP)

SMALL VEH. STORAGE

83'x94' = 7802 SF

Weston&Sampson Engineers, Inc. Innovative Solutions since 1899	PROJECT: BRANFORD	DATE: 9/2011	PAGE: 23
		BY: JJA	
		CHKD. BY: DJS	

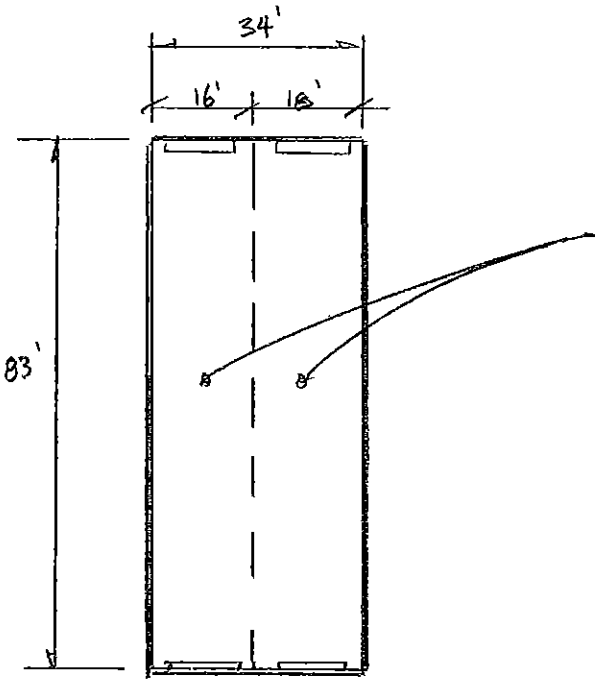

- COMPRESSOR (81 BR)
- TIGER MOWER (89 BR)
- TRACTOR (228R)
- TRACTOR (96 BR)
- TRAILER (83BR)
- TRAILER (156)
- TRAILER (159)
- WOODCHIPPER (87BR)
- TRAILER (107 BR)

EQUIPMENT STORAGE

$34' \times 83' = 2,822$

Town of Branford
Department of Public Works
Space Needs Summary
September 22, 2011

Building Requirements

Area	Description	Size (SF)	Ref #	Sheet No.	Room / Area Dimensions length	width	size
Office & Office Support Areas	Vestibule/Waiting/Reception	204	A7.05	1	-	-	-
	Administration Area (2 Admin Staff)	216	A8.05	1	12	18	216
	DPW Director	216	A1.02	2	12	18	216
	Highway Supervisor	180	A1.05	2	12	15	180
	Highway Foreman	96	-	2	8	12	96
	Copy/File/Mail Area	266	A9.03	2	14	19	266
	Active File Storage	168	C7.03	3	12	14	168
	Archive File Storage	168	C7.03**	3	12	14	168
	Conference Room	180	A10.04	3	12	15	180
	Administration Lunch Room	144	B2.08	3	12	12	144
	Supply Closet	120	A11.01	4	10	12	120
	Telephone / Data Room	100	C11.01	4	10	10	100
	General Closet (Qty 2)	80	A11.02	4	4	20	80
	Janitor Closet	36	A11.01	4	6	6	36
	Admin Toilet Facilities	150	B3.01	4	7.5	20	150
	Subtotal:	2,324					
	Area Grossing Factor (10%):	232					
	Circulation (15%):	383					
	TOTAL:	**2,940**					
Employee Facilities	Male Locker/Shower/Toilet	750	B1.08	5	25	30	750
	Female Locker/Shower/Toilet	150	B1.13	5	10	15	150
	Workforce Lunch Room	800	B2.05	6	25	32	800
	Storm Event / Training Room	-	B4.06	-	0	0	-
	Shared Foreman Office (GGB, BOE)	256	A2.02 **	7	16	16	256
	Main Electric Room	150	B5.01	7	10	15	150
	Plumbing/Fire Protection Room	140	B5.02	7	10	14	140
	Subtotal:	2,246					
	Area Grossing Factor (10%):	225					
	Circulation (15%):	371					
	TOTAL:	**2,841**					

Town of Branford
Department of Public Works
Space Needs Summary
September 22, 2011

Building Requirements

Area	Description	Size (SF)	Ref #	Sheet No.	Room / Area Dimensions length	width	size
Work Shops & Material Storage	Sign Shop	Combined in multi-use shop			-	-	-
	Highway Carpentry Shop	Combined in multi-use shop			-	-	-
	Multi-use Shared Shop	1,750	C1.05	9	50	35	1,750
	BOE Carpentry Shop	Combined in multi-use shop			-	-	-
	GGB Material Storage Area	576	C5.11	10	24	24	576
	Caged Area for Hand Tools	150	new	10	10	15	150
	General Material Storage Area	576	new	11	16	36	576
	Compressor Room	96	new	10	8	12	96
	Subtotal:	3,148					
	Area Grossing Factor (10%):	315					
	Circulation (10%):	346					
	TOTAL:	**3,809**					
Vehicle Maintenance	Maintenance Fluid Storage	270	D5.06 **	12	15	18	270
	Metal Fabricating / Welding Shop	1,375	D3.01	16	25	55	1,375
	Heavy Equipment Drive-Thru Bay	1,210	D3.01	16	22	55	1,210
	Heavy Equipment Bay	990	D3.01	16	18	55	990
	Small Equipment Bay	720	D3.01	16	18	40	720
	Hydraulic Hose Workshop	100	C3.21	14	10	10	100
	Maintenance Supervisor Office	120	A2.07	14	10	12	120
	Maintenance Reference Room	100	C8.03	14	10	10	100
	Maintenance Workshop	144	C3.24	15	8	18	144
	Large Tool Storage Area	225	new	15	15	15	225
	Maintenance Tire Storage & Shop	360	C9.06	16	18	20	360
	Battery Charging / Storage Room	64	new	16	8	8	64
	Maintenance Check-in Area	64	new	--	8	8	64
	Parts Storage Room	350	C5.10	20	14	25	350
	Subtotal:	6,092					
	Area Grossing Factor (10%):	609					
	Circulation (10%):	670					
	TOTAL:	**7,371**					

Town of Branford
Department of Public Works
Space Needs Summary
September 22, 2011

Building Requirements

Area	Description	Size (SF)	Ref #	Sheet No.	Room / Area Dimensions length	width	size
Wash Area	Wash Bay	1,250	D 4.03	21	25	50	1,250
	Wash Equipment Room	180	D 4.03	21	12	15	180
	Subtotal:	1,430					
	Area Grossing Factor (5%):	72					
	Circulation:	n/a					
	TOTAL:	**1,502**					
Vehicle and Equipment Storage	Large Vehicle Storage Area	8,798	D3.04	19	83	106	8,798
	Small Vehicle Storage Area	6,474		19	83	78	6,474
	Equipment Storage Area	1,328		-	16	83	1,328
	Subtotal:	16,600					
	Area Grossing Factor (5%):	830					
	Circulation:	n/a					
	TOTAL:	**17,430**					
	TOTAL:	**35,894**					

Staffing	Current	Seasonal	Future
DPW Administration	3		-
Highway Workforce	11	3	-
Highway Vehicle Maintenance Workforce	4		-
Board of Education Workforce	1		-
General Government Building	2		-
Total:	**21**	**3**	**-**

Brandford Department of Public Works
Space Needs Guidelines
WORK SHEET

September 24, 2011

These guidelines have been prepared by Weston & Sampson based upon our experience with more than 50 public works facility projects in the last 10 years. These guidelines can be utilized by communities to identify an estimated facility size prior to undertaking a comprehensive programming effort.

Guidelines (as developed from similar completed DPW projects):		Ideal	Minimum
Administration	Average SF per Admin Person	670	569
Employee Facilities	Average SF per Work Force Person	130	110
Shops (including Maintenance)	Average SF per Division	3,554	3,021
Vehicle / Equipment Storage (for centre drive-thru)	Average SF per Rolling Stock	817	695
Vehicle / Equipment Storage (for stacked parking)	Average SF per Rolling Stock	695	591
Wash /Other	Average SF	2,955	2,512

Note: Average SF guidelines include all common spaces including circulation, toilets, common reception, etc.

IDEAL SPACE NEEDS		Qty	SF	Ideal SF
Administration	Number of Administration Personnel	3 x	670 =	2,010
Employee Facilities	Number of Work Force Employees	18 x	130 =	2,337
Shops	Number of Divisions - Highway - Vehicle Maintenance - BOE - GGB	4 x	3,554 =	14,216
Vehicle / Equipment Storage	Number of Vehicles (see note 1)	29 x	695 =	20,155
Wash / Other	(see note 2)	1 x	2,955 =	2,955
			TOTAL:	41,672

MINIMUM SPACE NEEDS		Qty	SF	Minimum SF
Administration	Number of Administration Personnel	3 x	569 =	1,708
Employee Facilities	Number of Work Force Employees	18 x	110 =	1,986
Shops	Number of Divisions - Highway - Vehicle Maintenance - BOE - GGB	4 x	3,021 =	12,084
Vehicle / Equipment Storage	Number of Vehicles (see note 1)	29 x	591 =	17,132
Wash / Other	(see note 2)	1 x	2,512 =	2,512
			TOTAL:	35,422

Notes:
1. When determining number of vehicles, include all pickups, sedans, medium & large trucks, large tractors, and construction equipment. Do not include small equipment such as trailers, sidewalk plows, mowers, etc. This smaller equipment is built into the guidelines.
2. "Other" includes open canopies for cold storage or sander body storage (this is a fixed #)
3. The minimum SF guidelines are based on a 15% reduction in the ideal space needs.

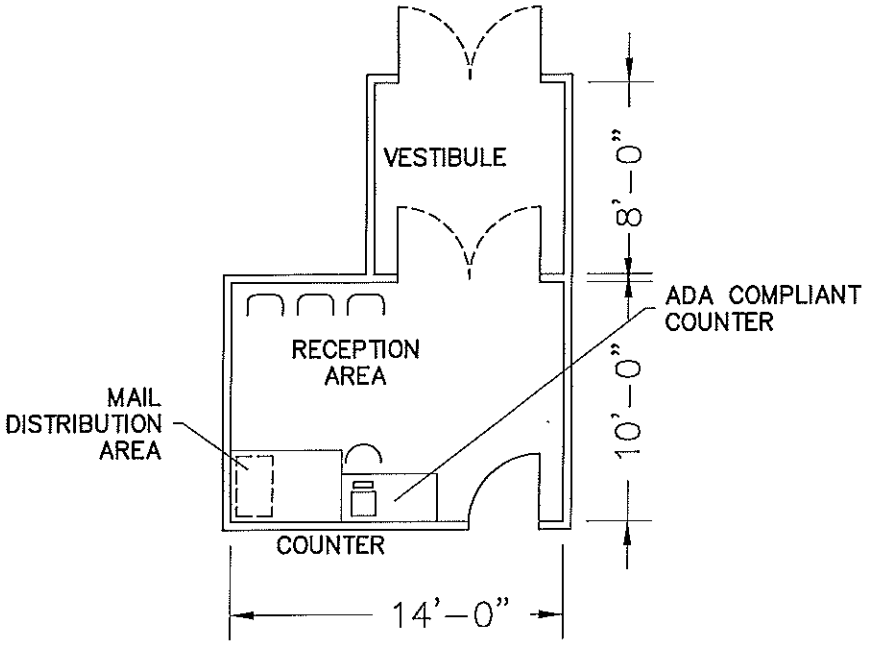

RECEPTION/VESTIBULE/WAITING AREA

8' x 8' = 64 SF
10' x 14' = 140 SF
TOTAL = 204 SF

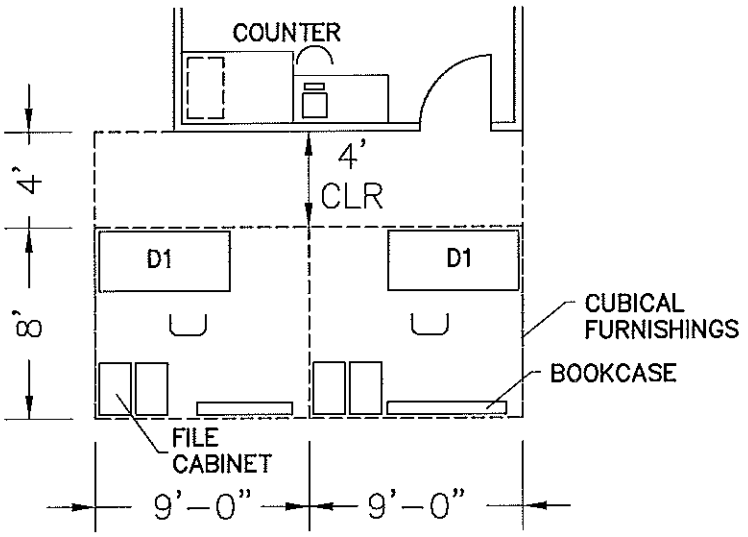

ADMINISTRATION AREA

12' x 18' = 216 SF

SPACE NEEDS ASSESSMENT

Branford, Connecticut

Scale: 1/8"=1'-0" Sheet 1

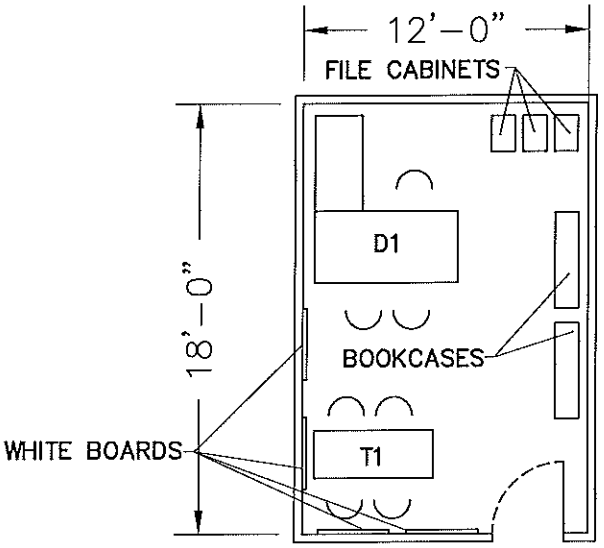

DPW DIRECTOR

12' x 18' = 216 SF

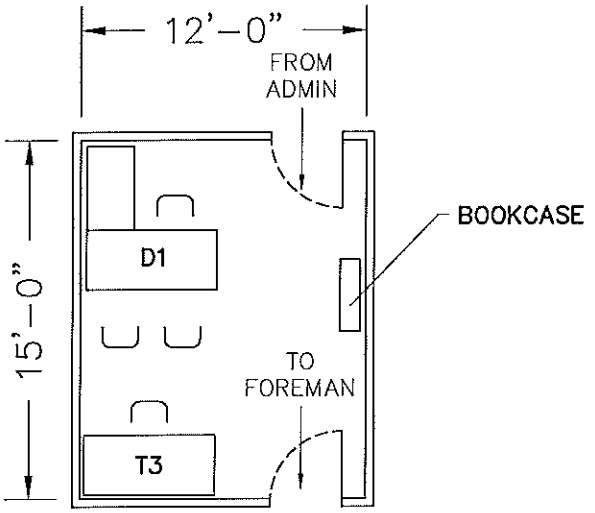

HIGHWAY SUPERVISOR

12' x 15' = 180 SF

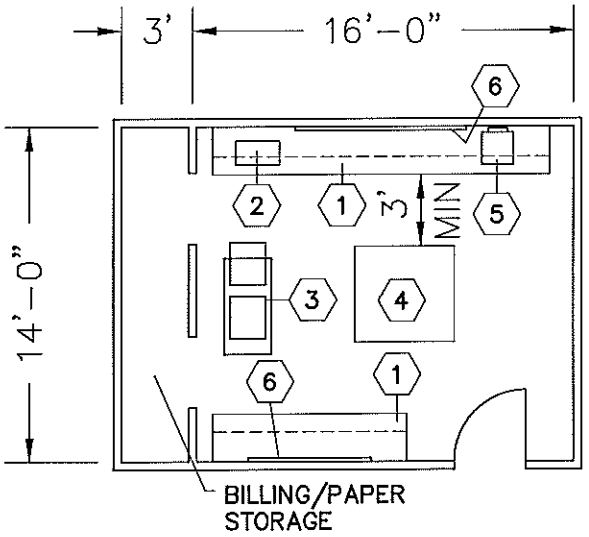

COPY–FILE–MAIL AREA

14' x 19' = 266 SF

1. COUNTER (WITH SHELVING BELOW)
2. STAMP MACHINE
3. COPIER
4. 4'x4' LAYOUT TABLE W/FLAT FILES
5. FAX MACHINE
6. PLUG STRIP

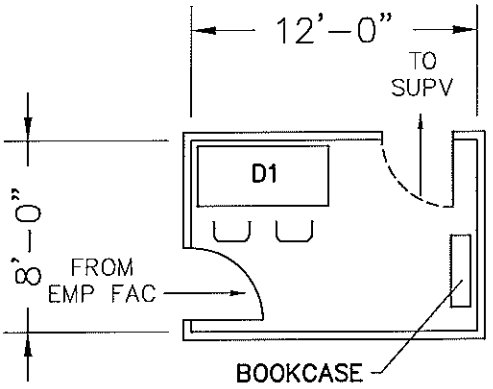

HIGHWAY FOREMAN

8' x 12' = 96 SF

SPACE NEEDS ASSESSMENT

Branford, Connecticut

Scale: 1/8"=1'-0" Sheet 2

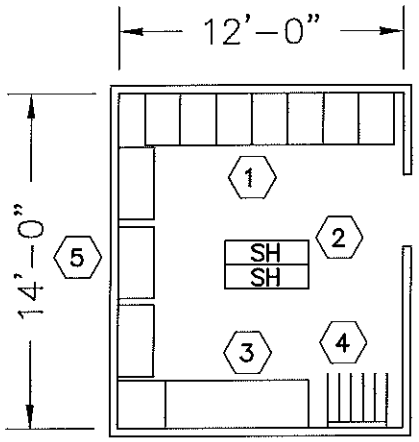

ACTIVE FILE STORAGE

12' x 14' = 168 SF

1. FILE CABINETS
2. HEAVY DUTY SHELVING (1' DEPTH)
3. HEAVY DUTY SHELVING (2' DEPTH)
4. HANGING PLAN FILE
5. LATERAL FILE CABINETS

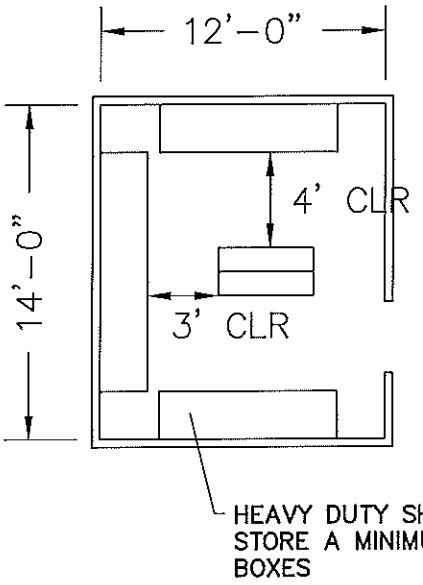

ARCHIVE FILE STORAGE

12' x 14' = 168 SF

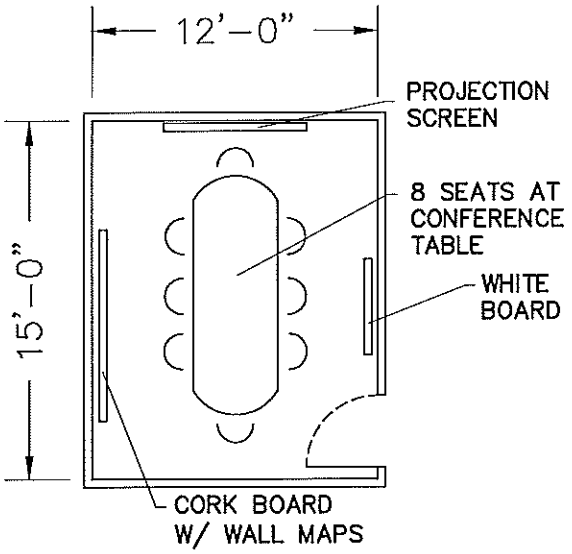

CONFERENCE ROOM

12' x 15' = 180 SF

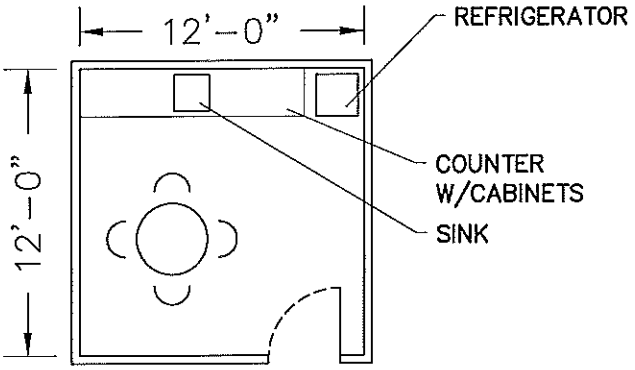

ADMINISTRATION LUNCH ROOM

12' x 12' = 144 SF

SPACE NEEDS ASSESSMENT

Branford, Connecticut

Scale: 1/8"=1'-0" Sheet 3

WESTON & SAMPSON ENGINEERS, INC.

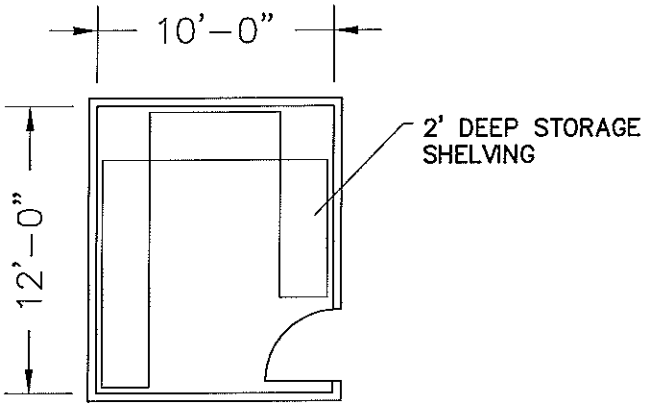

SUPPLY CLOSET

10' x 12' = 120 SF

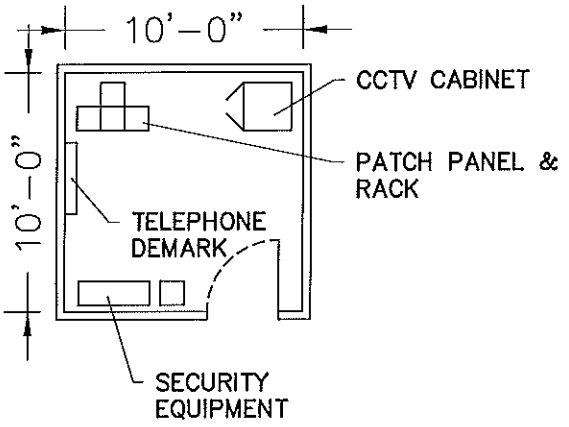

TELEPHONE/DATA ROOM

10' x 10' = 100 SF

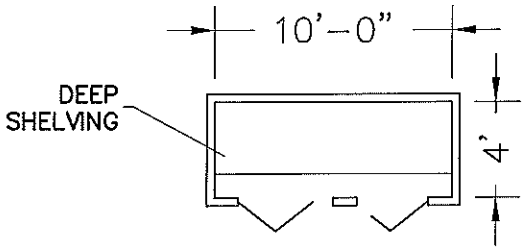

GENERAL CLOSET (QTY 2)

10' x 4' = 40 SF
10' x 4' = 40 SF

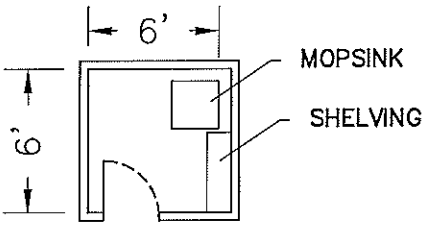

JANITOR CLOSET

6' x 6' = 36 SF

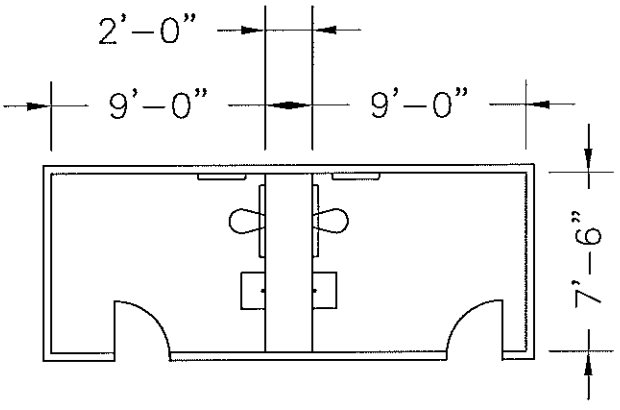

ADMINISTRATION TOILET FACILITIES

7'-6" x 20' = 150 SF

SPACE NEEDS ASSESSMENT

Branford, Connecticut

Scale: 1/8"=1'-0"

Sheet 4

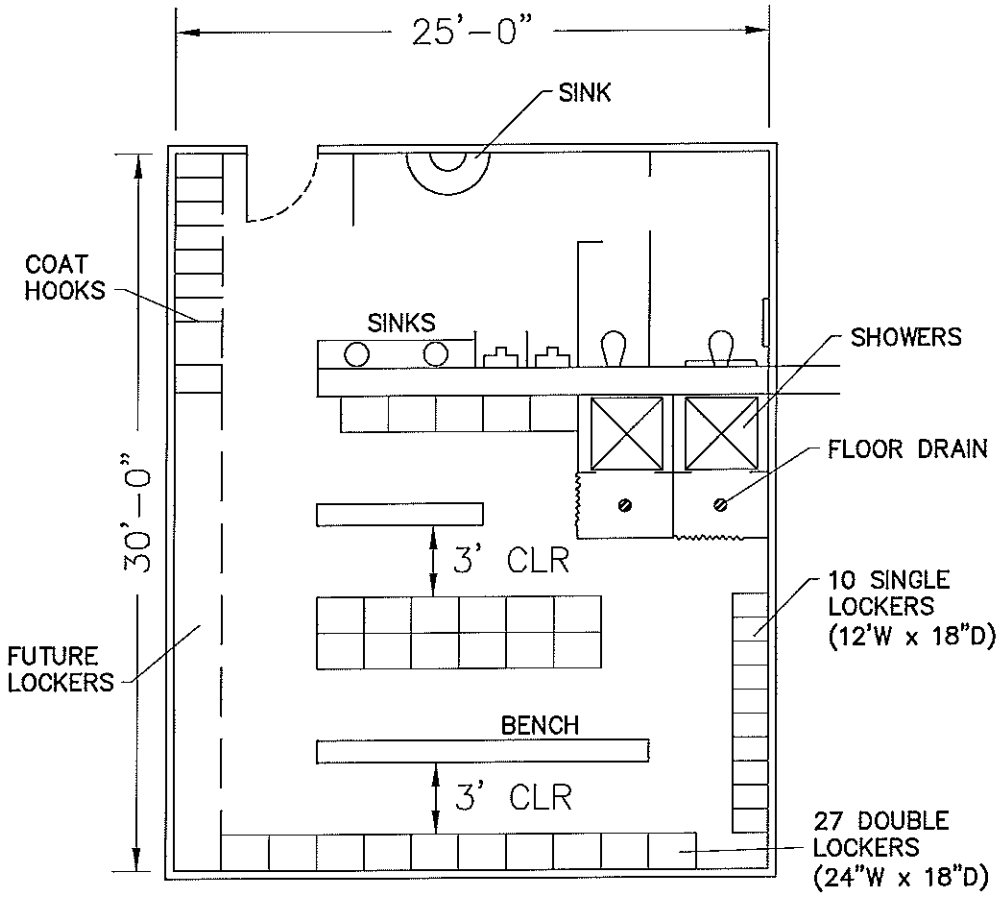

MALE LOCKER/SHOWER/TOILET
25' x 30' = 750 SF

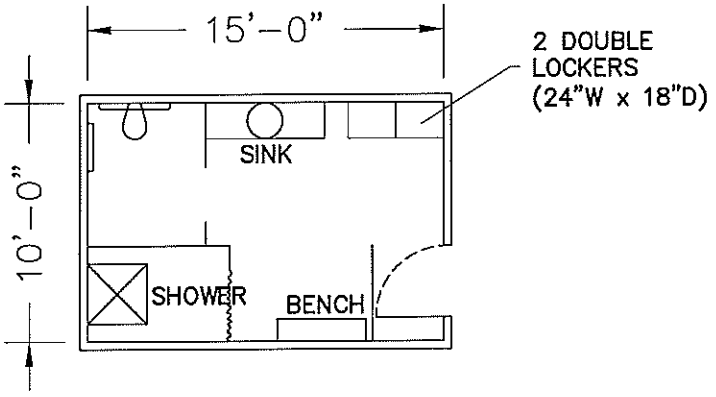

FEMALE LOCKER/SHOWER/TOILET
10' x 15' = 150 SF

SPACE NEEDS ASSESSMENT

Branford, Connecticut

Scale: 1/8"=1'-0" Sheet 5

WESTON & SAMPSON ENGINEERS, INC.

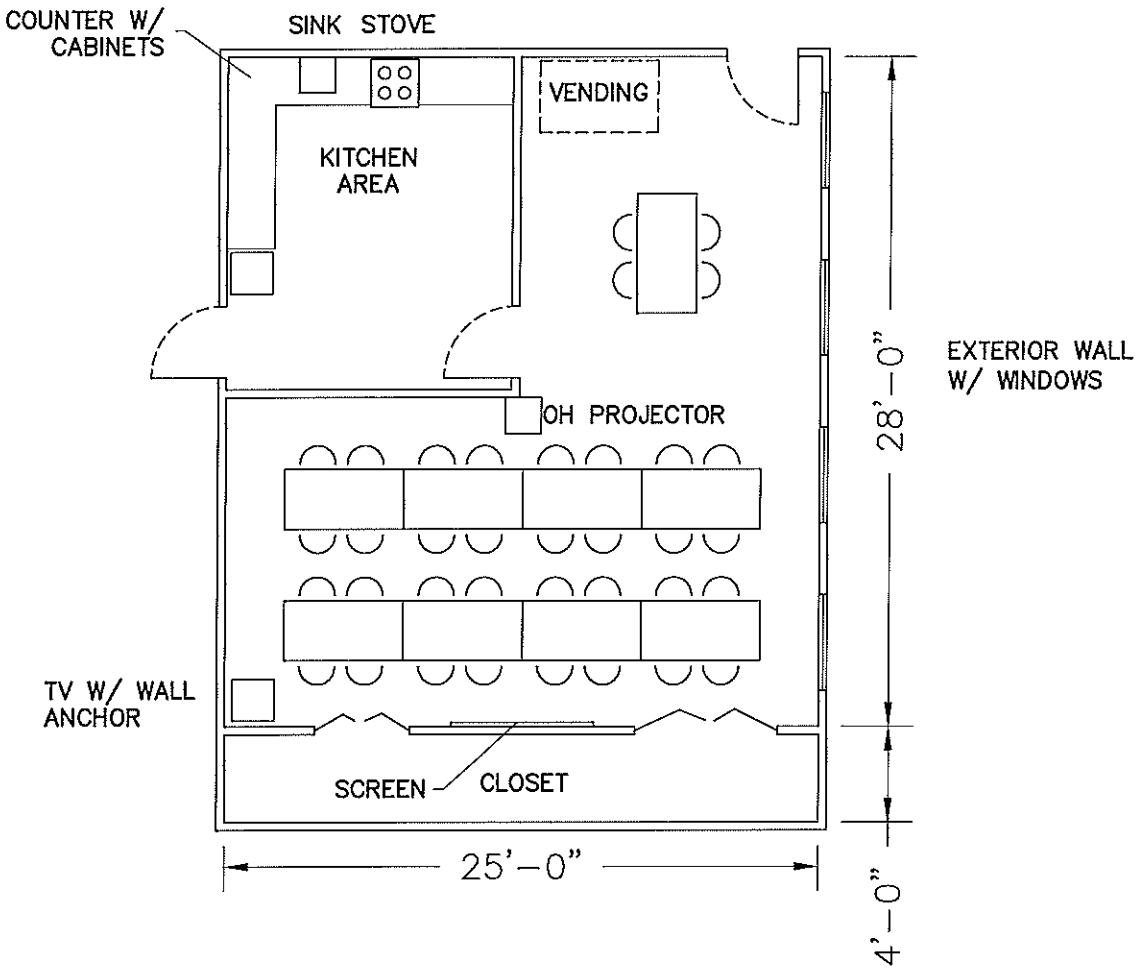

WORK FORCE LUNCH ROOM/TRAINING ROOM

25' x 32' = 800 SF

SPACE NEEDS ASSESSMENT

Branford, Connecticut

Scale: 1/8"=1'-0" Sheet 6

WESTON & SAMPSON ENGINEERS, INC.

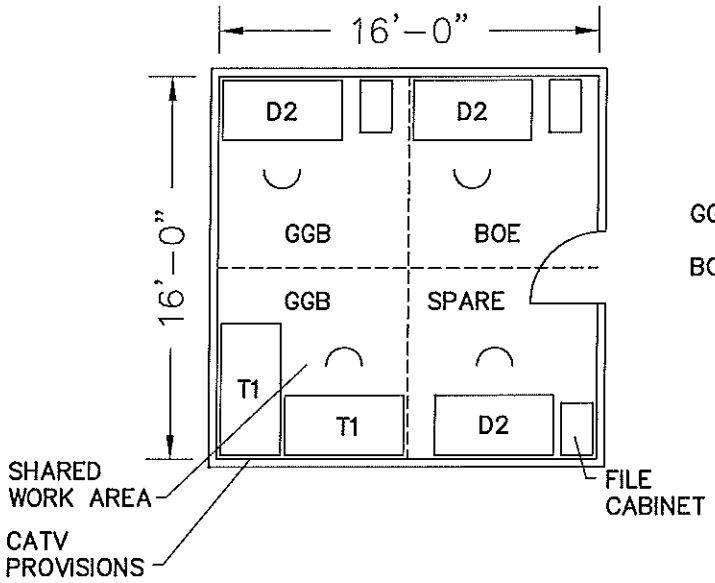

GGB: GENERAL GOVERNMENT BUILDINGS

BOE: BOARD OF EDUCATION

SHARED FOREMAN OFFICE

16' x 16' = 256 SF

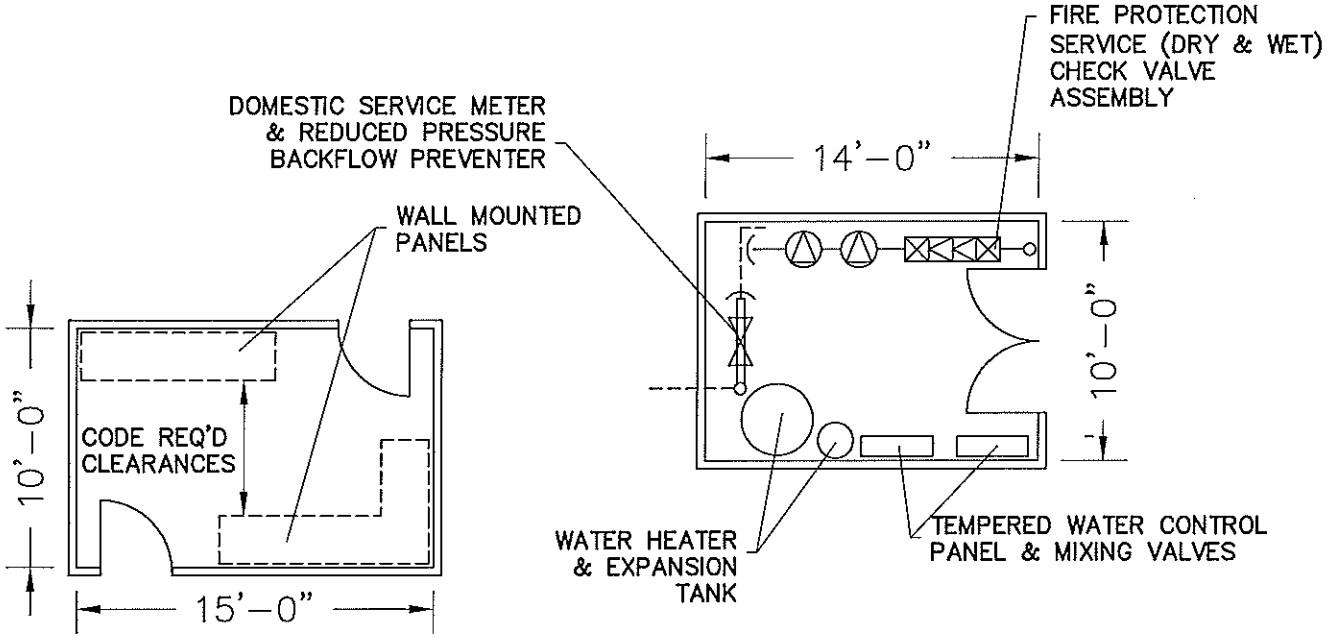

MAIN ELECTRIC ROOM

10' x 15' = 150 SF

PLUMBING/FIRE PROTECTION ROOM

10' x 14' = 140 SF

SPACE NEEDS ASSESSMENT

Branford, Connecticut

Scale: 1/8"=1'-0" Sheet 7

WESTON & SAMPSON ENGINEERS, INC.

SPACE NEEDS ASSESSMENT

Branford, Connecticut

Scale: 1/8"=1'-0"

Sheet 9

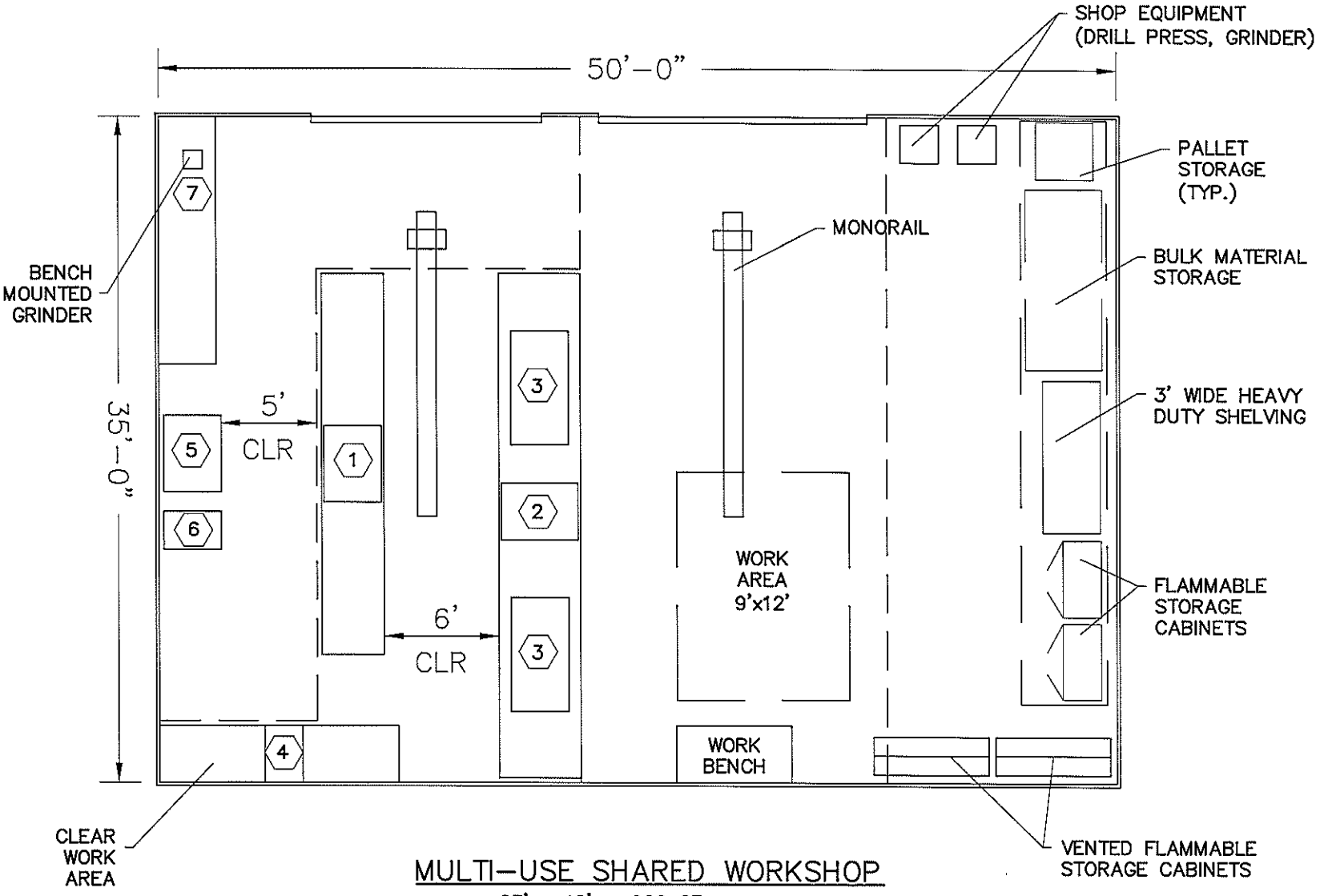

MULTI-USE SHARED WORKSHOP

23' x 40' = 920 SF

1. PLANNER
2. TABLE SAW
3. WORK BENCH
4. RADIAL ARM SAW
5. JOINTER
6. DRILL PRESS
7. PEDESTAL GRINDER

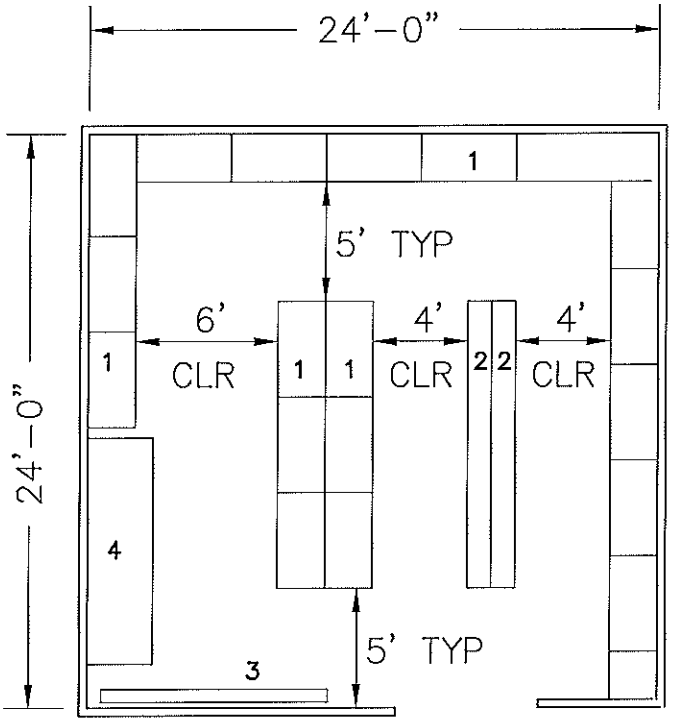

MATERIAL STORAGE AREA (GGB)

24' x 24' = 576 SF

NOTES:

1. 24" HEAVY DUTY SHELVING
2. SMALL PARTS BIN
3. WALL STORAGE (HANGING HOSES, BELTS, ETC.)
4. BULK FLOOR STORAGE

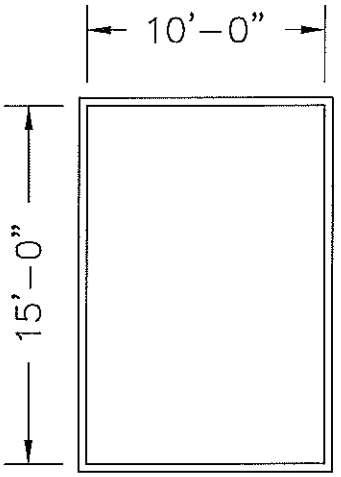

CAGED AREA FOR HAND TOOLS

15' x 15' = 225 SF

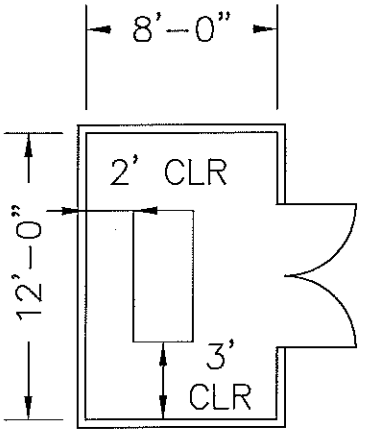

COMPRESSOR ROOM

8' x 12'

SPACE NEEDS ASSESSMENT

Branford, Connecticut

Scale: 1/8"=1'-0" Sheet 10

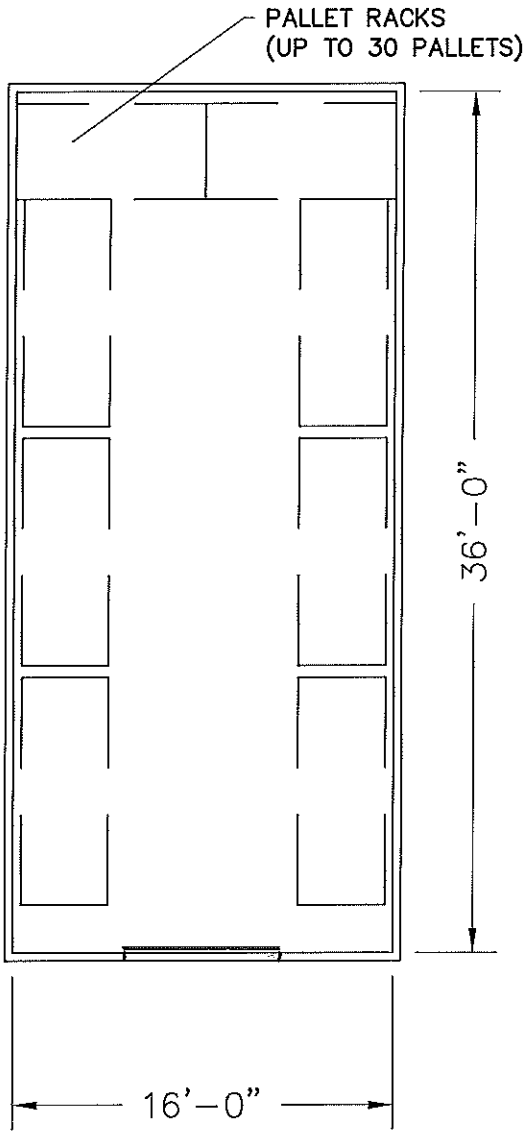

GENERAL MATERIAL
STORAGE AREA

22' x 36' = 792 SF

SPACE NEEDS ASSESSMENT

Branford, Connecticut

Scale: 1/8"=1'-0" Sheet 11

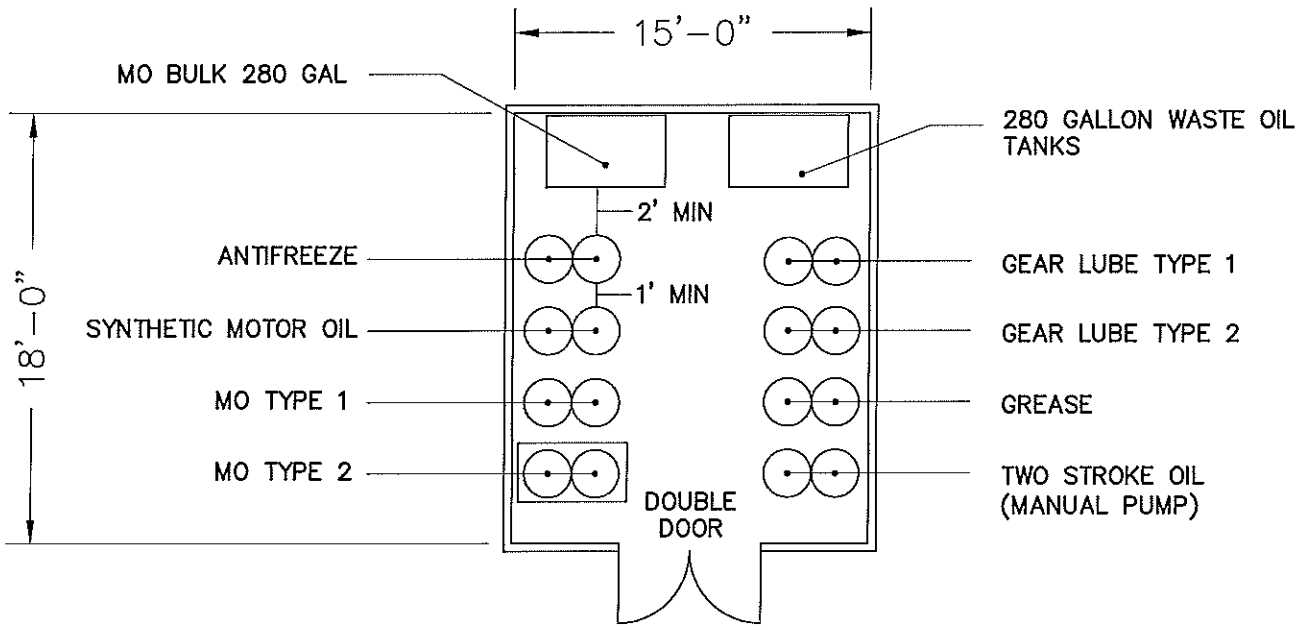

MAINTENANCE FLUID STORAGE

15' x 18' = 270 SF

NOTES:

1. ALL BULK TANKS ARE DOUBLE-WALL ABOVE GROUND
2. DEPRESS FLOOR 12"
3. WATER STOPS AT FLOOR/WALL INTERSECTION
4. 2-HOUR RATE ROOM (WALLS,CEILING,DOOR)
5. MOUNT AIR OPERATED PUMPS ALONG WALL

SPACE NEEDS ASSESSMENT

Branford, Connecticut

Scale: 1/8"=1'-0" Sheet 12

WESTON & SAMPSON ENGINEERS, INC.

SPACE NEEDS ASSESSMENT

Branford, Connecticut

Scale: 1/16"=1'-0"

Sheet 13

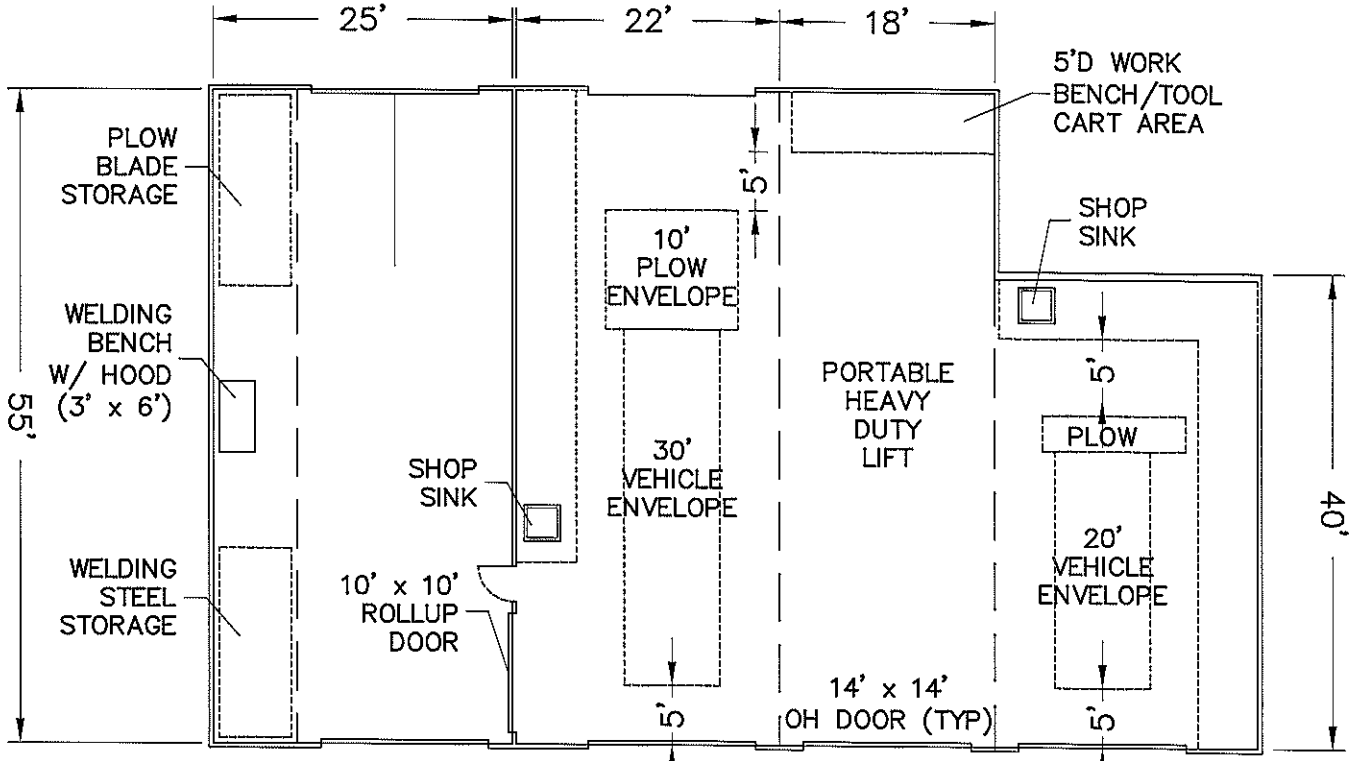

VEHICLE / EQUIPMENT MAINTENANCE BAYS

NOTES:

1. PROVIDE OVERHEAD TAILPIPE EXHAUST SYSTEM
2. PROVIDE LUBRICATION DISTRIBUTION SYSTEM
3. PROVIDE 3-BAY BRIDGE CRANE
4. PROVIDE HEAVY DUTY FIXED LIFT, HEAVY DUTY PORTABLE LIFT, AND LIGHT DUTY LIFT

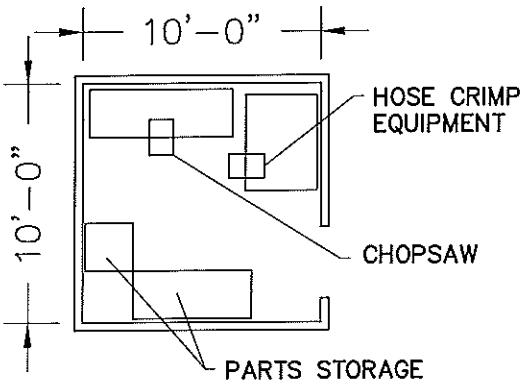

HYDRAULIC HOSE WORKSHOP

10' x 10' = 100 SF

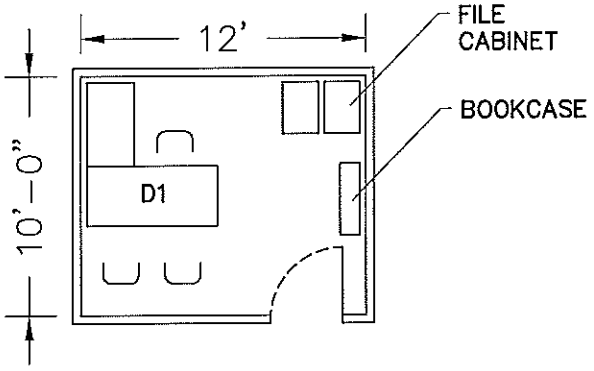

MAINTENANCE SUPERVISOR OFFICE

10' x 12' = 120 SF

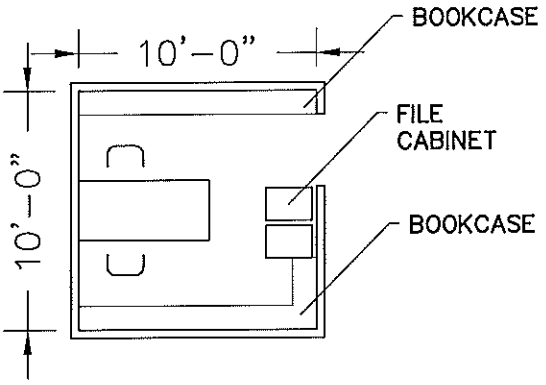

MAINTENANCE REFERENCE ROOM

10' x 10' = 100 SF

SPACE NEEDS ASSESSMENT

Branford, Connecticut

Scale: 1/8"=1'-0" Sheet 14

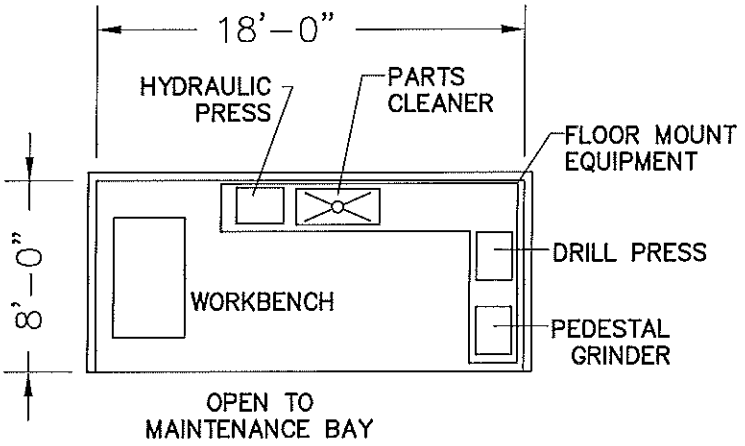

MAINTENANCE WORKSHOP

8' X 18' = 144 S.F.

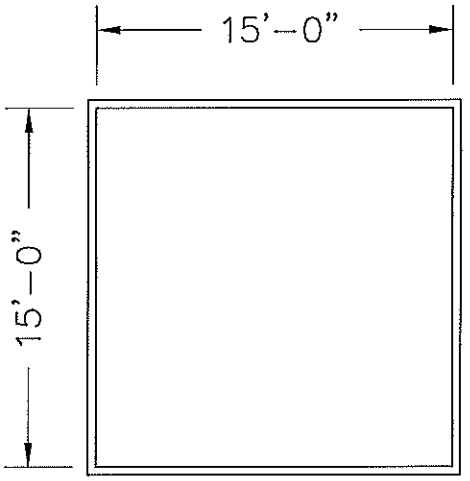

LARGE TOOL STORAGE AREA

15' X 15' = 225 S.F.

SPACE NEEDS ASSESSMENT

Branford, Connecticut

Scale: 1/8"=1'-0" Sheet 15

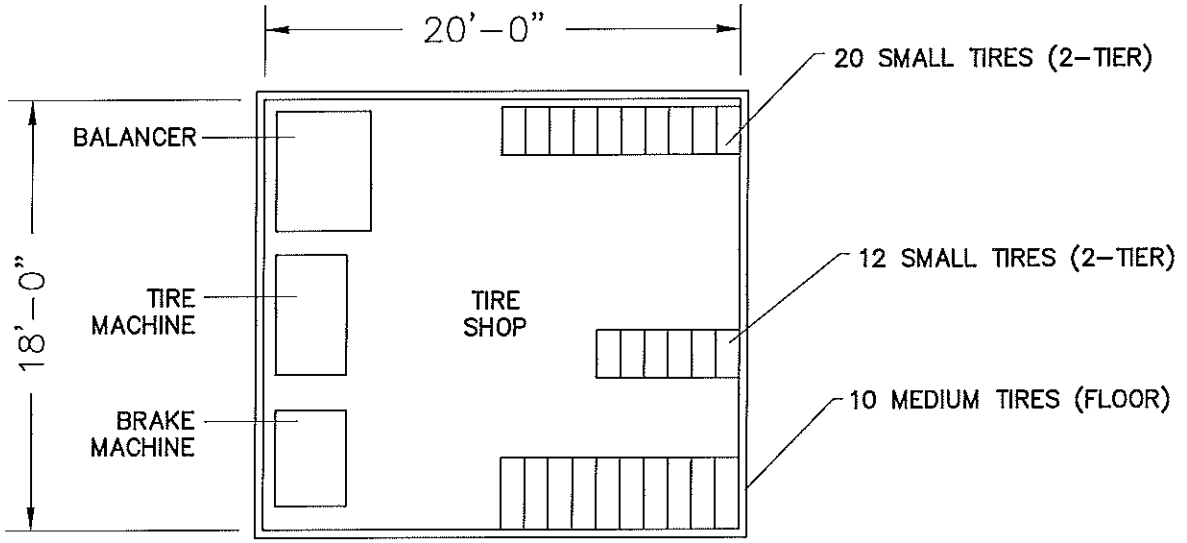

MAINTENANCE TIRE STORAGE/WORKSHOP

18' x 20' = 360 S.F.

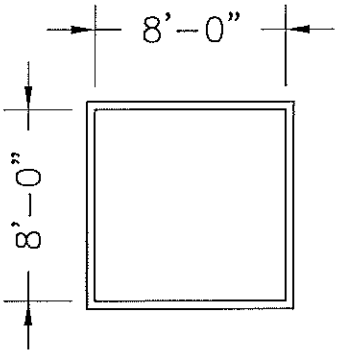

BATTERY CHARGING/STORAGE ROOM

8' x 8' = 64 S.F.

SPACE NEEDS ASSESSMENT

Branford, Connecticut

Scale: 1/8"=1'-0" Sheet 16

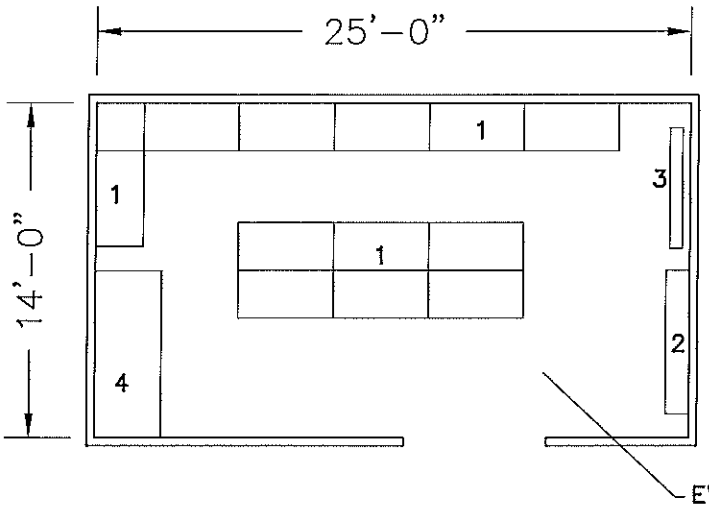

PARTS STORAGE ROOM

25' x 28' = 700 SF

NOTES:

1. 24" HEAVY DUTY SHELVING
2. SMALL PARTS BIN
3. WALL STORAGE (HANGING HOSES, BELTS, ETC.)
4. BULK FLOOR STORAGE

SPACE NEEDS ASSESSMENT

Branford, Connecticut

Scale: 1/8"=1'-0" Sheet 17

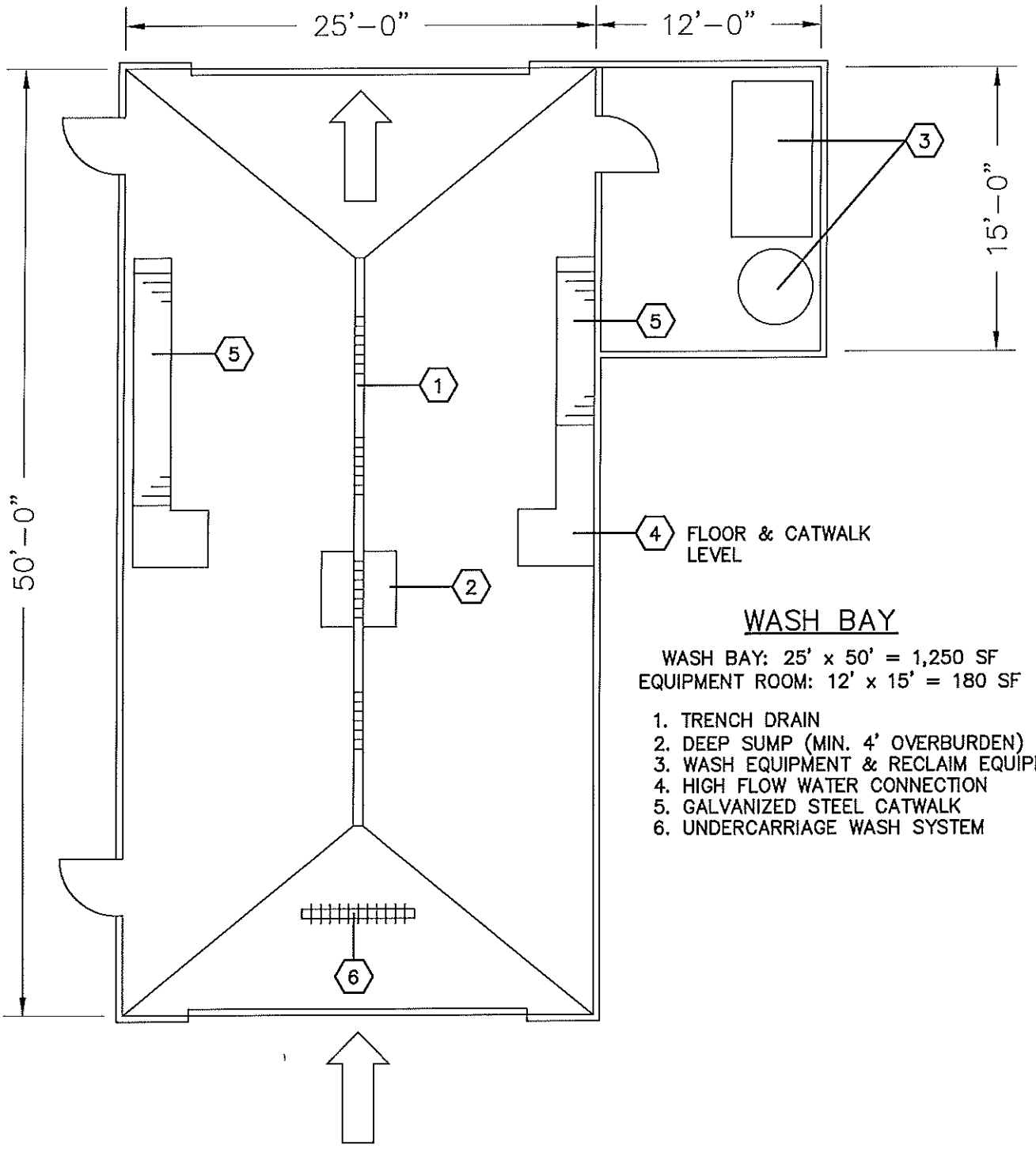

4 FLOOR & CATWALK LEVEL

WASH BAY

WASH BAY: 25' x 50' = 1,250 SF
EQUIPMENT ROOM: 12' x 15' = 180 SF

1. TRENCH DRAIN
2. DEEP SUMP (MIN. 4' OVERBURDEN)
3. WASH EQUIPMENT & RECLAIM EQUIPMENT
4. HIGH FLOW WATER CONNECTION
5. GALVANIZED STEEL CATWALK
6. UNDERCARRIAGE WASH SYSTEM

SPACE NEEDS ASSESSMENT

Branford, Connecticut

Scale: 1/8"=1'-0" Sheet 18

Weston & Sampson Engineers, Inc. — Innovative Solutions since 1899	PROJECT: BRANFORD	DATE: 9/2011	PAGE: 19
		BY: JJA	
		CHKD. BY: DJS	

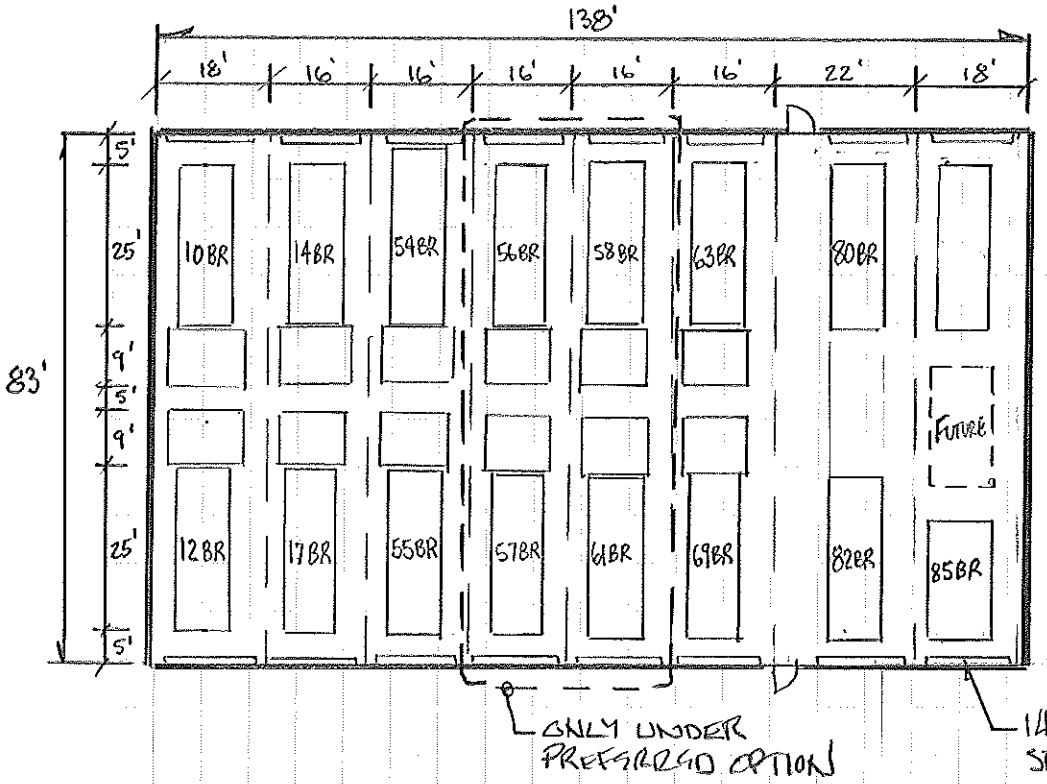

LARGE VEH STORAGE

83'x138' = 11,454 SF (PREFERRED)

83'x106' = 8798 SF (MIN.)

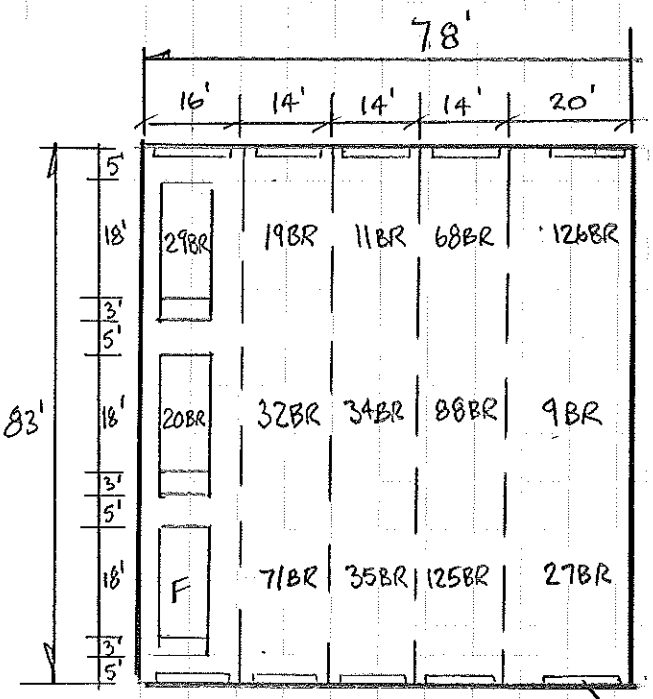

OR

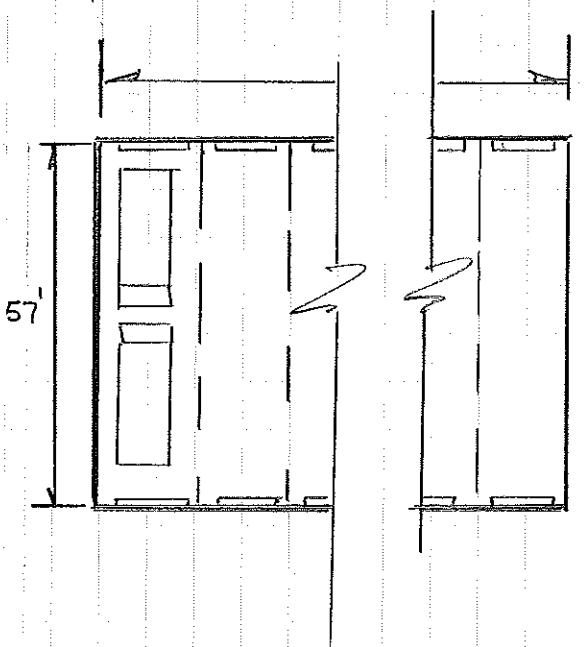

SMALL VEH. STORAGE

83'x78' = 6474 SF

Parcels Considered for the Highway Garage Facility

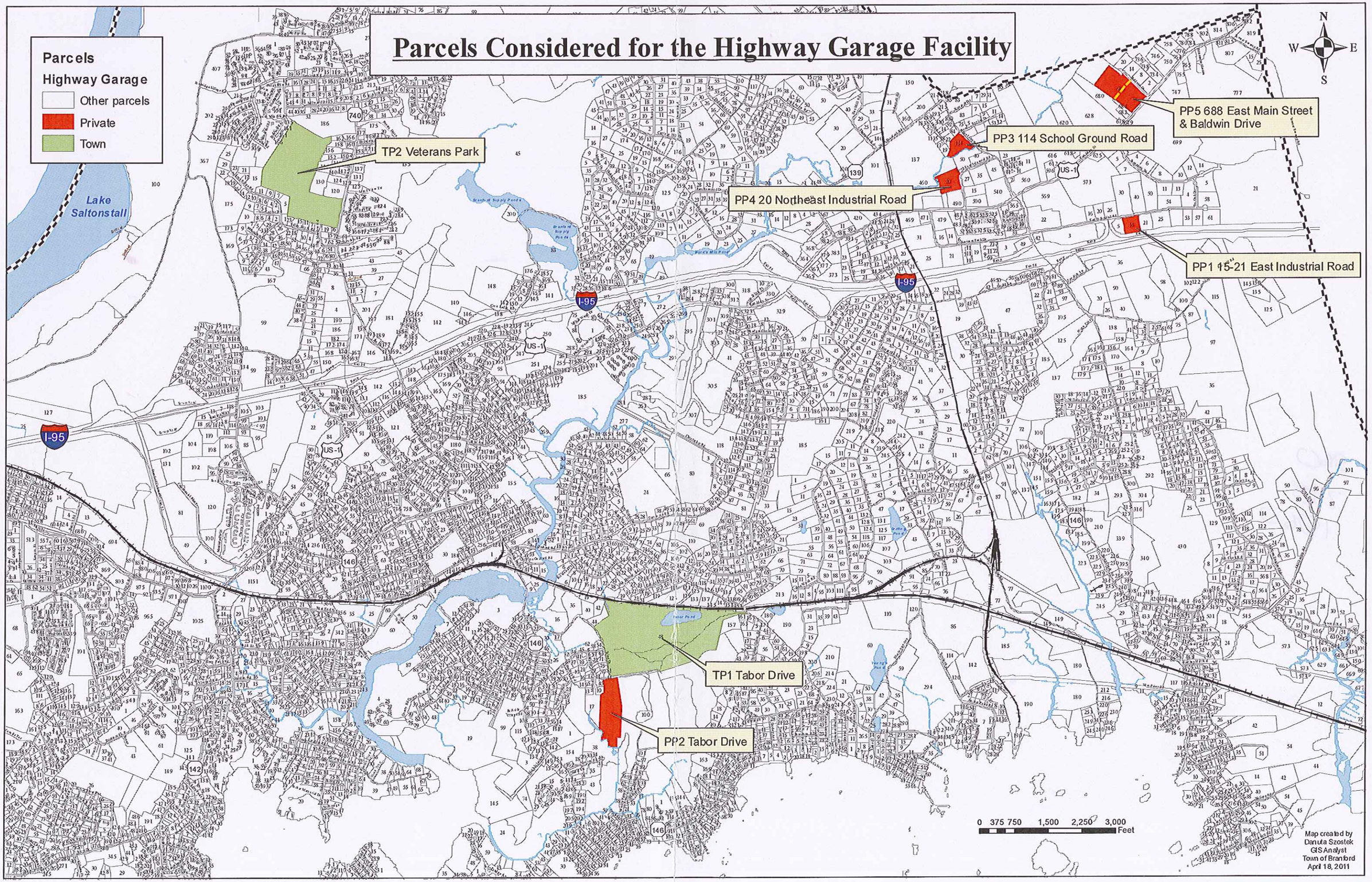

Town of Branford, CT
DPW Site Selection Study

TP-1: 48-86 Tabor Drive

View of cleared area at Tabor Drive site

View of cleared area at Tabor Drive site

Town of Branford, CT
DPW Site Selection Study
TP-1: 48-86 Tabor Drive
October 2011

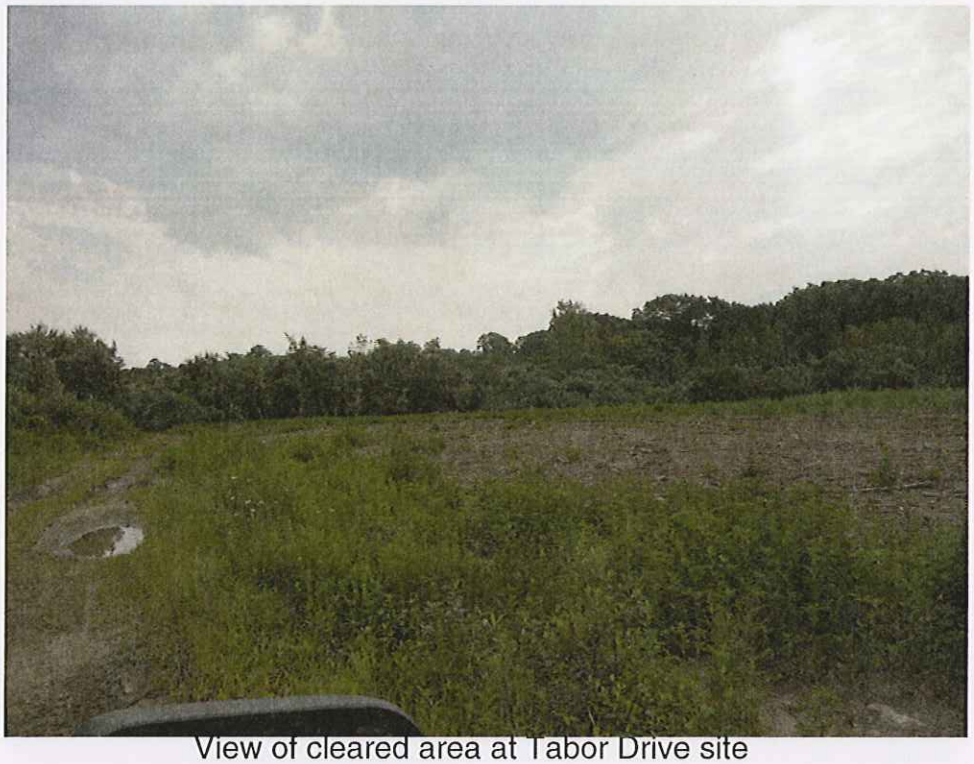

View of cleared area at Tabor Drive site

View of Tabor Drive site leaving the property to the east

Town of Branford, CT
DPW Site Selection Study
TP-1: 48-86 Tabor Drive
October 2011

Town of Branford

Geographic Information System (GIS)

Date Printed: 9/13/2011

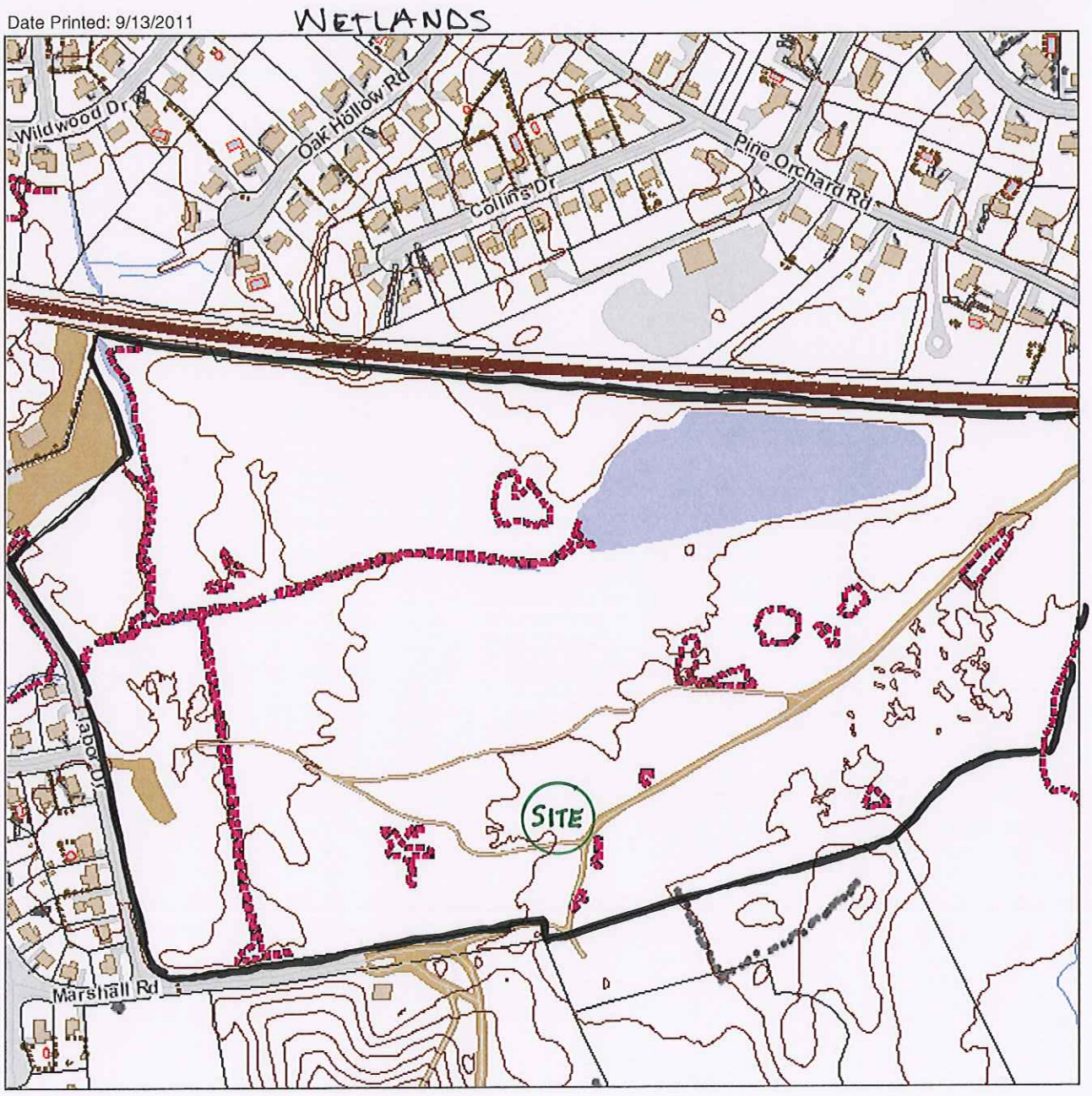

MAP DISCLAIMER - NOTICE OF LIABILITY

This map is for assessment purposes only. It is not for legal description or conveyances. All information is subject to verification by any user. The Town of Branford and its mapping contractors assume no legal responsibility for the information contained herein.

0 400 Feet

N W E S

Town of Branford

Geographic Information System (GIS)

Date Printed: 9/13/2011

ZONING

MAP DISCLAIMER - NOTICE OF LIABILITY

This map is for assessment purposes only. It is not for legal description or conveyances. All information is subject to verification by any user. The Town of Branford and its mapping contractors assume no legal responsibility for the information contained herein.

0 1,000 Feet

N W E S

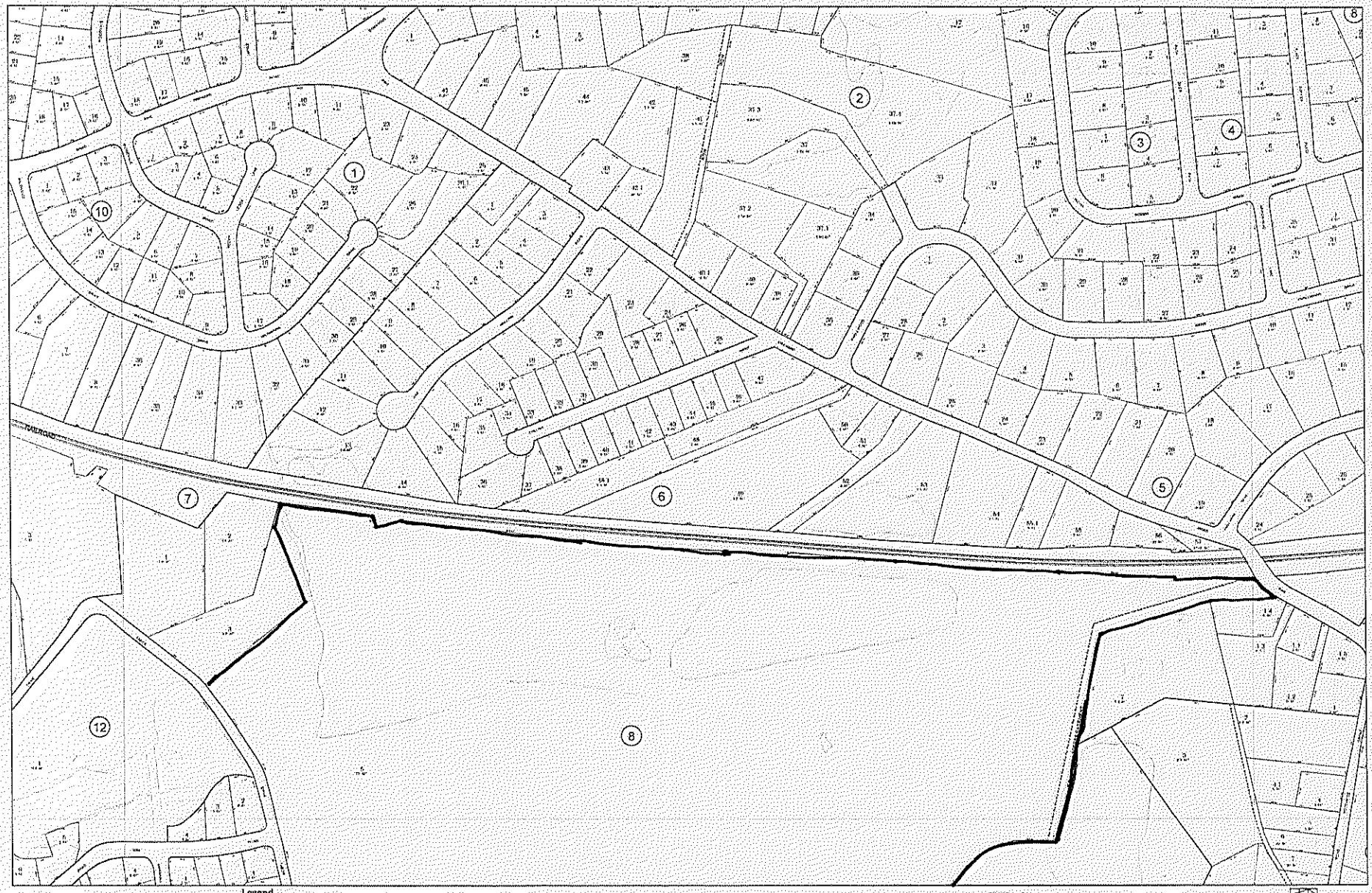

Legend

- Railroad Tracks
- MHW / Easement Boundary
- Water Feature: Swamp, Pond, River, Lake
- Mean High Water Level
- Property Lines as of December 2007
- Block Boundary
- Town Boundary
- (0.00) Measured Dimension
- 00.00 Source Map Dimension
- Building Structure
- (5) Block Number
- 10 Lot Number
- A.04AC Acreage

ASSESSMENT MAP OF
THE TOWN OF BRANFORD, CONNECTICUT 2007

DATES OF AERIAL PHOTOGRAPHY: MARCH 29 AND APRIL 6, 1999

MAP PRINTED JANUARY 2008

SCALE 1 = 200'

100 50 0 100 200 300 400 500 Feet

This map is for informational purposes only. All information is subject to verification by any user. The Town of Branford and its mapping contributors assume no legal responsibility for the information contained herein.

Map: F08

F07	F07	G07
E08		G08
E09	F09	G09

Property Location: 48-86 TABOR DR | MAP ID: F08/000 008/ 00005/ / | Bldg Name: | State Use: 9030

Vision ID: 1051 | Account #013049 | Bldg #: 1 of 1 | Sec #: 1 of 1 | Card 1 of 1 | Print Date: 04/15/2010 09:20

CURRENT OWNER	TOPO.	UTILITIES	STRT./ROAD	LOCATION
BRANFORD TOWN OF	4 Rolling	1 All Public	1 Paved	5 Industrial
1019 MAIN ST	6 Low			
BRANFORD, CT 06405	7 Wet			
Additional Owners:				

SUPPLEMENTAL DATA

Other ID: F08/000/008/00005/	HLDG TK
CONDO BLDG	SEPTIC
CONDO UNIT	SEWER
CONDO FLOOI	DISTRICT
	CENSUS TR 1844
GIS ID: F08/000/008/00005	ASSOC PID#

CURRENT ASSESSMENT

Description	Code	Appraised Value	Assessed Value
EX COM LN	21	4,237,500	2,966,200
	Total	4,237,500	2,966,200

6014
BRANFORD, CT

VISION

RECORD OF OWNERSHIP

	BK-VOL/PAGE	SALE DATE	q/u	v/i	SALE PRICE	V.C.
BRANFORD TOWN OF	0855/0428	01/05/2004	U	V		11
PERROTTI FRANK JR 1/2 +	0709/0528	10/23/2000	U		0	
LEITZE ROBERT C TRUSTEE	0709/0523	10/23/2000	U		0	
SANTA BARBARA THOMAS ET AL	0506/0752					

PREVIOUS ASSESSMENTS (HISTORY)

Yr.	Code	Assessed Value	Yr.	Code	Assessed Value	Yr.	Code	Assessed Value
2009	21	2,966,200	2008	21	2,966,200	2004	21	2,966,200
	Total:	2,966,200		Total:	2,966,200		Total:	2,966,200

EXEMPTIONS

Year	Type	Description	Amount
		Total:	

OTHER ASSESSMENTS

Code	Description	Number	Amount	Comm. Int.

This signature acknowledges a visit by a Data Collector or Assessor

APPRAISED VALUE SUMMARY

Appraised Bldg. Value (Card)	0
Appraised XF (B) Value (Bldg)	0
Appraised OB (L) Value (Bldg)	0
Appraised Land Value (Bldg)	4,237,500
Special Land Value	0
Total Appraised Parcel Value	4,237,500
Valuation Method:	C
Adjustment:	0
Net Total Appraised Parcel Value	4,237,500

ASSESSING NEIGHBORHOOD

NBHD/ SUB	NBHD NAME	STREET INDEX NAME	TRACING	BATCH
375/A				

NOTES

EXTENSIVE ROAD FRONTAGE
ON TABOR DR.

BUILDING PERMIT RECORD

Permit ID	Issue Date	Type	Description	Amount	Insp. Date	% Comp.	Date Comp.	Comments

VISIT/ CHANGE HISTORY

Date	Type	IS	ID	Cd.	Purpose/Result
2/26/2009			RV	00	Measur+Listed
10/9/2002			AH	11	Field Review
6/27/2002			TM	99	Vacant

LAND LINE VALUATION SECTION

B #	Use Code	Use Description	Zone	D	Frontage	Depth	Units		Unit Price	I. Factor	S.A.	Acre Disc	C. Factor	ST. Idx	Adj.	Notes- Adj	Special Pricing	Adj. Unit Price	Land Value
1	9030	MUNICIPAL MDL00	IG-2				1.38	AC	271,220.00	0.81	1	1.0000	1.00	375	0.93				280,600
1	9030	MUNICIPAL MDL00					75.64	AC	75,000.00	1.00	0	1.0000	0.75	375	0.93	WET/EASMT			3,956,900

Total Card Land Units: 77.02 AC | Parcel Total Land Area: 77.02 AC | Total Land Value: 4,237,500

Property Location: 48-86 TABOR DR *MAP ID:* F08/000 008/ 00005/ / *Bldg Name:* *State Use:* 9030

Vision ID: 1051 *Account #* 013049 *Bldg #:* 1 of 1 *Sec #:* 1 *of* 1 *Card* 1 *of* 1 *Print Date:* 04/15/2010 09:20

CONSTRUCTION DETAIL

Element	Cd.	Ch.	Description
Model	00		Vacant

CONSTRUCTION DETAIL (CONTINUED)

Element	Cd.	Ch.	Description

MIXED USE

Code	Description	Percentage
9030	MUNICIPAL MDL00	100

COST/MARKET VALUATION

Adj. Base Rate:	0.00
Replace Cost	0
AYB	
Dep Code	
Remodel Rating	
Year Remodeled	
Dep %	
Functional Obsinc	
External Obsinc	
Cost Trend Factor	
Status	
% Complete	
Overall % Cond	
Apprais Val	
Dep % Ovr	0
Dep Ovr Comment	
Misc Imp Ovr	0
Misc Imp Ovr Comment	
Cost to Cure Ovr	0
Cost to Cure Ovr Comment	

OB-OUTBUILDING & YARD ITEMS(L) / XF-BUILDING EXTRA FEATURES(B)

Code	Description	Sub	Sub Descript	L/B	Units	Unit Price	Yr	Gde	Dp Rt	Cnd	%Cnd	Apr Value

BUILDING SUB-AREA SUMMARY SECTION

Code	Description	Living Area	Gross Area	Eff. Area	Unit Cost	Undeprec. Value
	Ttl. Gross Liv/Lease Area:	0	0	0		

No Photo On Record

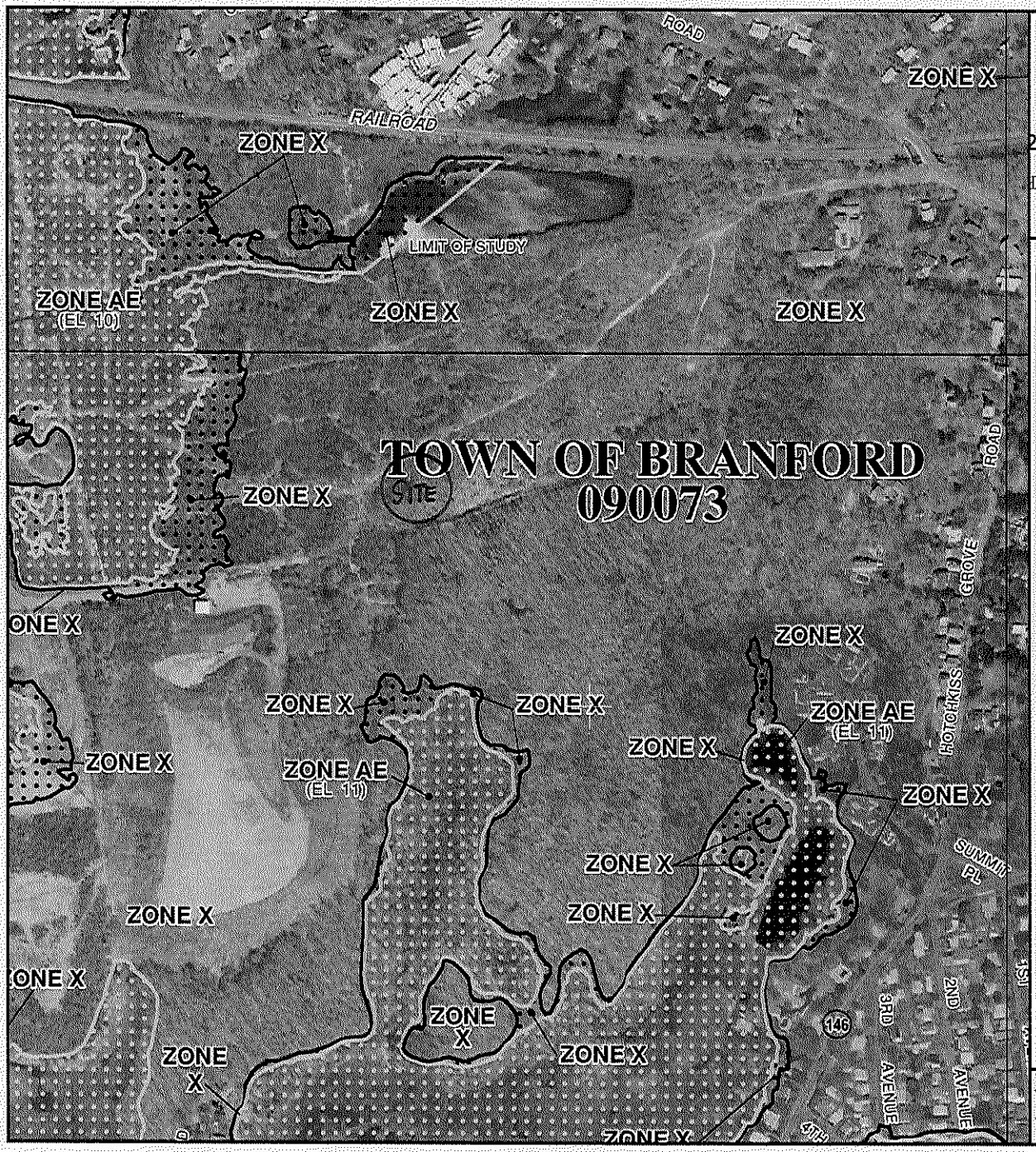

MAP SCALE 1" = 500'

250 0 500 1000

FEET

METER

NATIONAL FLOOD INSURANCE PROGRAM

PANEL 0468H

FIRM

FLOOD INSURANCE RATE MAP

NEW HAVEN COUNTY, CONNECTICUT

(ALL JURISDICTIONS)

PANEL 468 OF 635

(SEE MAP INDEX FOR FIRM PANEL LAYOUT)

CONTAINS:

COMMUNITY	NUMBER	PANEL	SUFFIX
BRANFORD, TOWN OF	090073	0468	H

Notice to User: The **Map Number** shown below should be used when placing map orders; the **Community Number** shown above should be used on insurance applications for the subject community.

MAP NUMBER
09009C0468H

EFFECTIVE DATE
DECEMBER 17, 2010

Federal Emergency Management Agency

This is an official copy of a portion of the above referenced flood map. It was extracted using F-MIT On-Line. This map does not reflect changes or amendments which may have been made subsequent to the date on the title block. For the latest product information about National Flood Insurance Program flood maps check the FEMA Flood Map Store at www.msc.fema.gov

Town of Branford

Geographic Information System (GIS)

Date Printed: 10/24/2011

NOT CONNECTED TO SEWER

MAP DISCLAIMER - NOTICE OF LIABILITY

This map is for assessment purposes only. It is not for legal description or conveyances. All information is subject to verification by any user. The Town of Branford and its mapping contractors assume no legal responsibility for the information contained herein.

0 800 Feet

N W E S

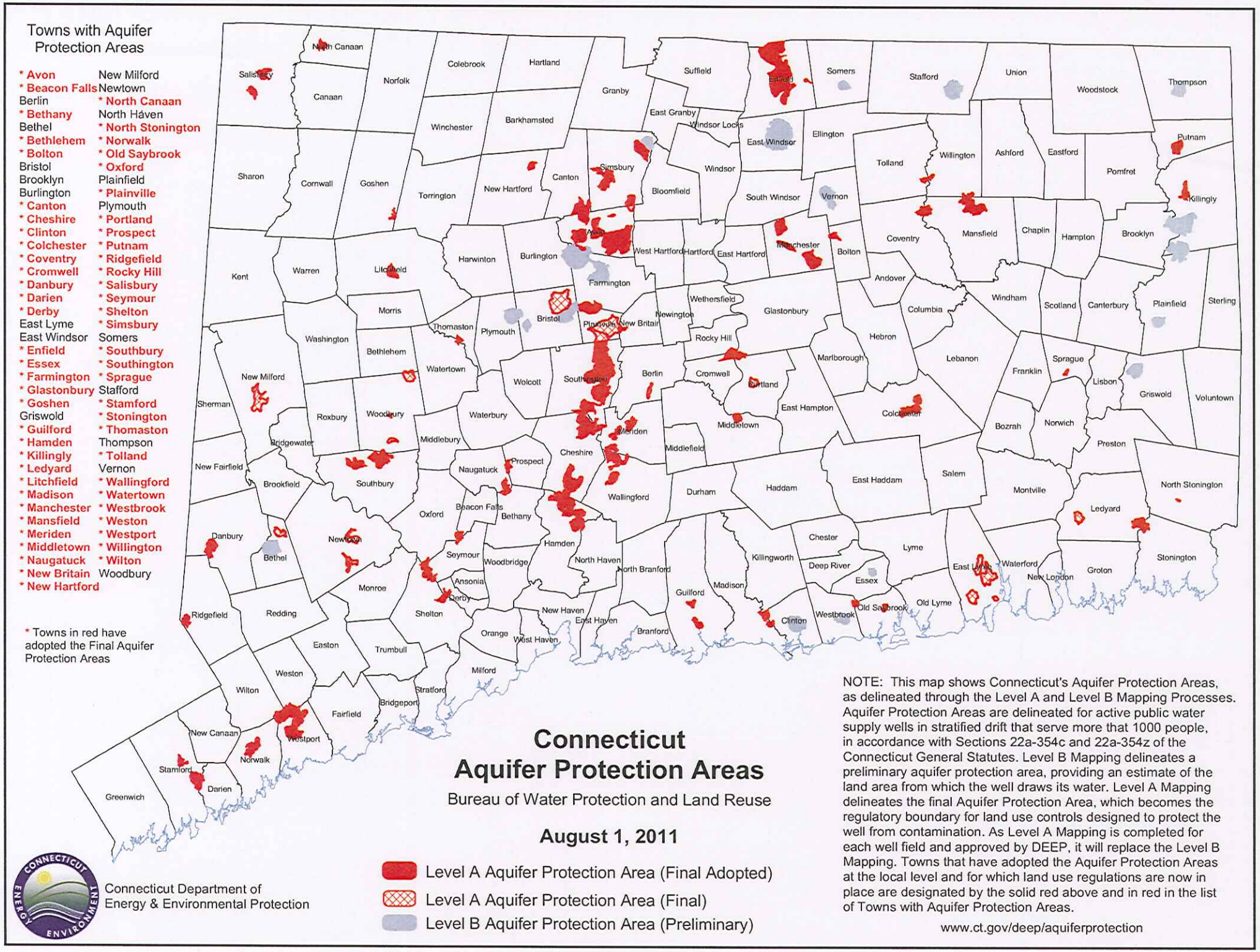
Towns with Aquifer Protection Areas
* Avon
* Beacon Falls
Berlin
* Bethany
Bethel
* Bethlehem
* Bolton
Bristol
Brooklyn
Burlington
* Canton
* Cheshire
* Clinton
* Colchester
* Coventry
* Cromwell
* Danbury
* Darien
* Derby
East Lyme
East Windsor
* Enfield
* Essex
* Farmington
* Glastonbury
* Goshen
Griswold
* Guilford
* Hamden
* Killingly
* Ledyard
* Litchfield
* Madison
* Manchester
* Mansfield
* Meriden
* Middletown
* Naugatuck
* New Britain
* New Hartford
New Milford
Newtown
* North Canaan
North Haven
* North Stonington
* Norwalk
* Old Saybrook
* Oxford
Plainfield
* Plainville
Plymouth
* Portland
* Prospect
* Putnam
* Ridgefield
* Rocky Hill
* Salisbury
* Seymour
* Shelton
* Simsbury
* Southbury
* Southington
* Sprague
Stafford
* Stamford
* Stonington
* Thomaston
Thompson
* Tolland
Vernon
* Wallingford
* Watertown
* Westbrook
* Weston
* Westport
* Willington
* Wilton
Woodbury
* Towns in red have adopted the Final Aquifer Protection Areas
Connecticut Aquifer Protection Areas
Bureau of Water Protection and Land Reuse
August 1, 2011
Level A Aquifer Protection Area (Final Adopted)
Level A Aquifer Protection Area (Final)
Level B Aquifer Protection Area (Preliminary)
Connecticut Department of Energy & Environmental Protection
NOTE: This map shows Connecticut's Aquifer Protection Areas, as delineated through the Level A and Level B Mapping Processes. Aquifer Protection Areas are delineated for active public water supply wells in stratified drift that serve more that 1000 people, in accordance with Sections 22a-354c and 22a-354z of the Connecticut General Statutes. Level B Mapping delineates a preliminary aquifer protection area, providing an estimate of the land area from which the well draws its water. Level A Mapping delineates the final Aquifer Protection Area, which becomes the regulatory boundary for land use controls designed to protect the well from contamination. As Level A Mapping is completed for each well field and approved by DEEP, it will replace the Level B Mapping. Towns that have adopted the Aquifer Protection Areas at the local level and for which land use regulations are now in place are designated by the solid red above and in red in the list of Towns with Aquifer Protection Areas.
www.ct.gov/deep/aquiferprotection

Natural Diversity Data Base Areas

BRANFORD, CT

July 2011

State and Federal Listed Species & Significant Natural Communities

Town Boundary

NOTE: This map shows general locations of State and Federal Listed Species and Significant Natural Communities. Information on listed species is collected and compiled by the Natural Diversity Data Base (NDDB) from a number of data sources . Exact locations of species have been buffered to produce the general locations. Exact locations of species and communities occur somewhere in the shaded areas, not necessarily in the center.

This map is intended for use as a preliminary screening tool for conducting a Natural Diversity Data Base Review Request. To use the map, locate the project boundaries and any additional affected areas. If the project is within a shaded area; or overlapping a lake, pond or wetland that has shading; or upstream or downstream (by less than 1/2 mile) from a shaded area, the project may have a potential conflict with a listed species. For more information, complete a Request for Natural Diversity Data Base State Listed Species Review form (DEP-APP-007), and submit it to the NDDB along with the required maps and information. More detailed instructions are provided with the request form on our website.

www.ct.gov/dep/nddbrequest

This file has PDF Layers. Look for the Layers tab on the left. Expand the layers and use the "eye" icons to change visibility.

QUESTIONS: Department of Energy and Environmental Protection (DEEP)
79 Elm St., Hartford CT 06106
Phone (860) 424-3011

Connecticut Department of Energy & Environmental Protection
Bureau of Natural Resources
Wildlife Division

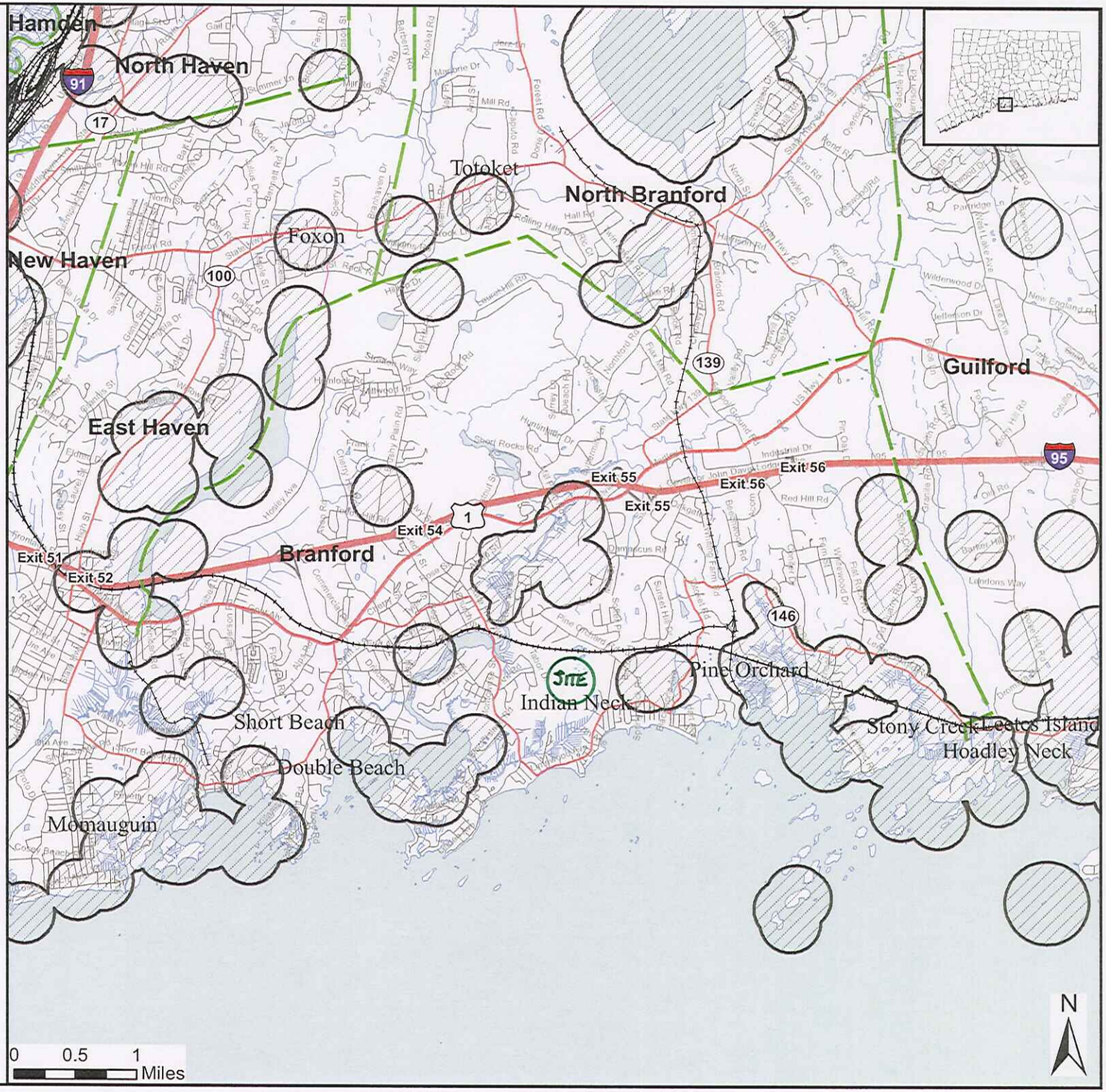

Town of Branford, CT
DPW Site Selection Study

TP-2: Veterans Memorial Park

Veterans Memorial Park site

View of tennis courts

Town of Branford, CT
DPW Site Selection Study
TP-2: Veterans Memorial Park
October 2011

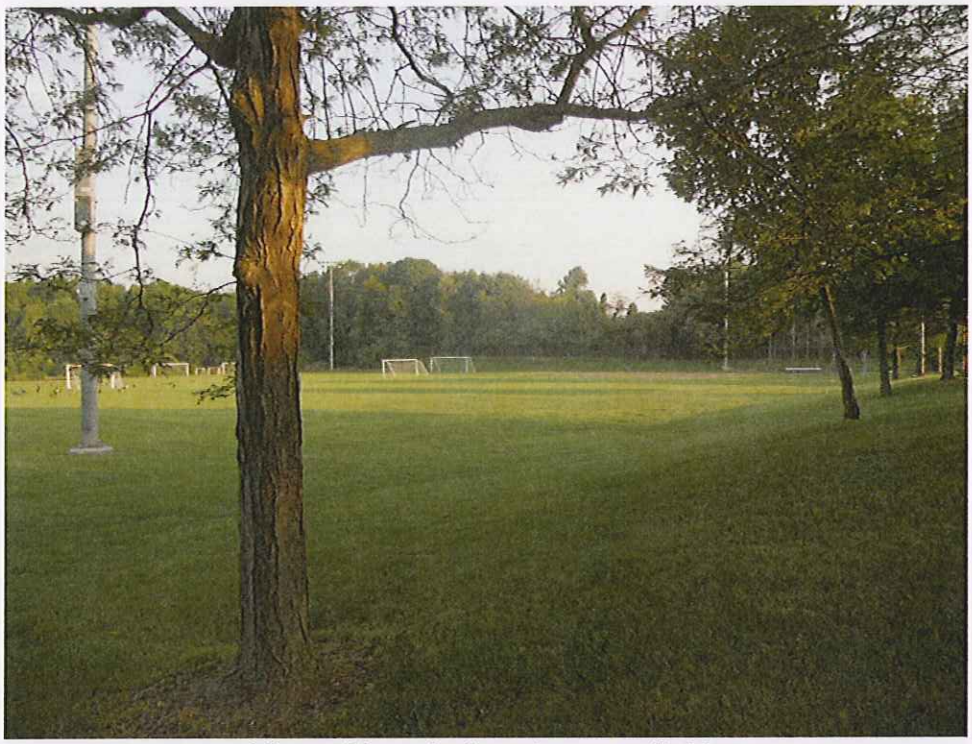

View of baseball and soccer fields

View of playground and restrooms

Town of Branford, CT
DPW Site Selection Study
TP-2: Veterans Memorial Park
October 2011

Town of Branford

Geographic Information System (GIS)

Date Printed: 9/13/2011

MAP DISCLAIMER - NOTICE OF LIABILITY

This map is for assessment purposes only. It is not for legal description or conveyances. All information is subject to verification by any user. The Town of Branford and its mapping contractors assume no legal responsibility for the information contained herein.

0 400 Feet

N W E S

Town of Branford

Geographic Information System (GIS)

Date Printed: 9/13/2011

ZONING

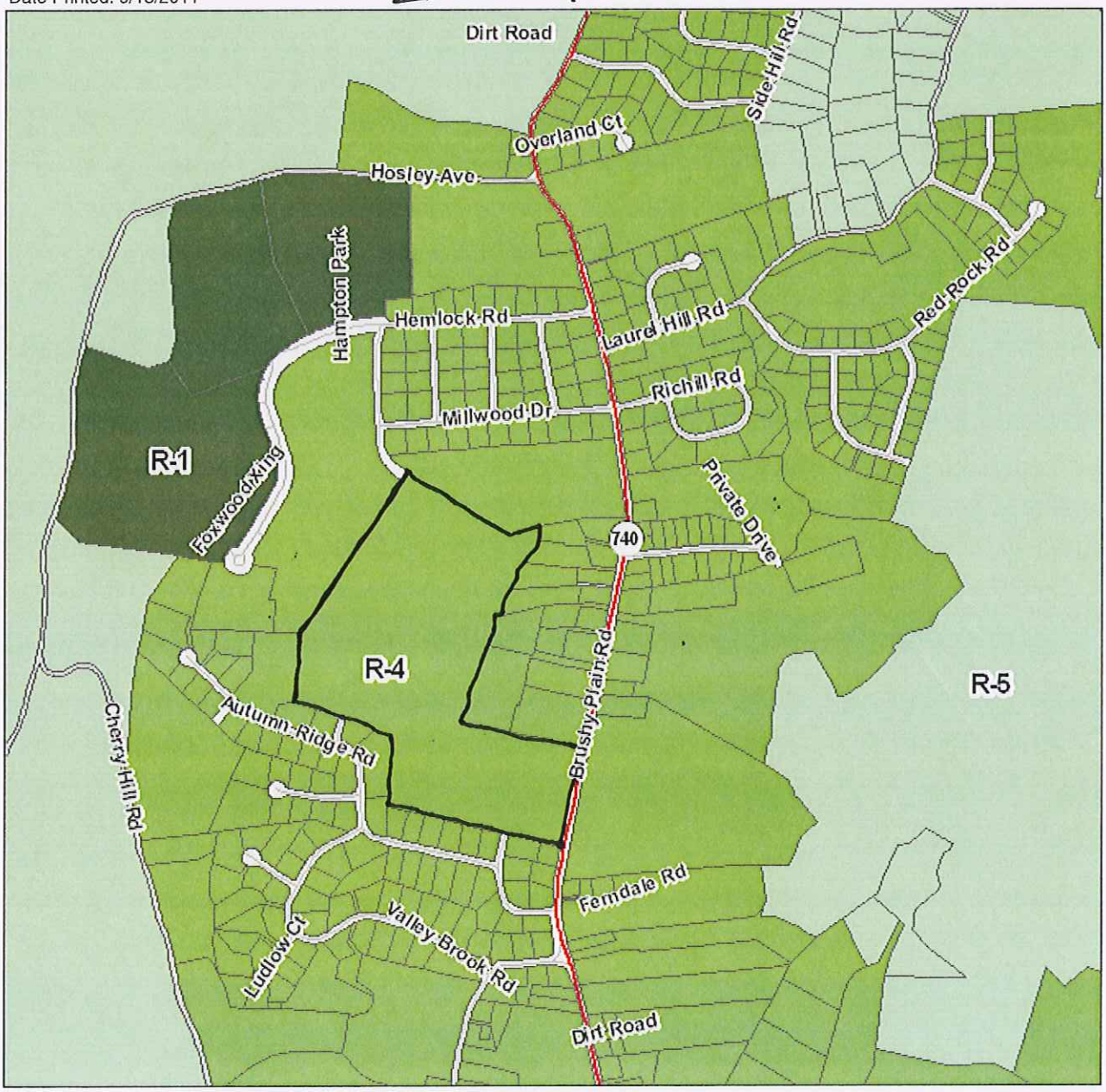

MAP DISCLAIMER - NOTICE OF LIABILITY

This map is for assessment purposes only. It is not for legal description or conveyances. All information is subject to verification by any user. The Town of Branford and its mapping contractors assume no legal responsibility for the information contained herein.

0 1,000 Feet

N W E S

Legend

XXX Railroad Tracks
ROW / Easement Boundaries
Water Features (Swamp, Pond, River, Lake)
Mean High Water Level
Property Lines as of December 2007
Block Boundaries
Town Boundaries
Measured Dimensions
Square Map Dimensions
Building Structure
5 Block Number
10 Lot Number
5.0 AC Acreage

ASSESSMENT MAP OF
THE TOWN OF BRANFORD, CONNECTICUT 2007

DATES OF AERIAL PHOTOGRAPHY: MARCH 29 AND APRIL 6, 1999

MAP PRINTED JANUARY 2008

SCALE 1" = 200'

100 50 0 100 200 300 400 500 Feet

This map is for informational purposes only. All information is subject to verification by any user. The Town of Branford and its mapping contractors assume no legal responsibility for the information contained hereon.

Map:D04

C03	D03	E03
C04		E04
C05	D05	E05

Property Location: BRUSHY PLAIN RD | MAP ID: D04/000 001/ 00025/ / | Bldg Name: | State Use: 9031

Vision ID: 494 | Account #011066 | Bldg #: 1 of 2 | Sec #: 1 of 1 | Card 1 of 3 | Print Date: 04/15/2010 08:39

CURRENT OWNER	TOPO.	UTILITIES	STRT./ROAD	LOCATION
BRANFORD TOWN OF SOCCER FIEL	1 Level	2 Public Water	1 Paved	2 Suburban
1019 MAIN ST	4 Rolling	3 Public Sewer	5 Curb & Gutter	6 Recreational
			6 Sidewalk	
BRANFORD, CT 06405				
Additional Owners:				

SUPPLEMENTAL DATA

Other ID:	D04/000/001/00025/	HLDG TK	
CONDO BLDG		SEPTIC	
CONDO UNIT		SEWER	
CONDO FLOOI		DISTRICT	
		CENSUS TR 1847	
GIS ID: D04/000/001/00025		ASSOC PID#	

CURRENT ASSESSMENT

Description	Code	Appraised Value	Assessed Value
EX COM LN	21	539,000	377,300
EX COM BL	22	59,200	41,500
EX CM OTB	25	352,100	246,500
	Total	950,300	665,300

6014
BRANFORD, CT

VISION

RECORD OF OWNERSHIP

	BK-VOL/PAGE	SALE DATE	q/u	v/i	SALE PRICE	V.C.
BRANFORD TOWN OF SOCCER FIELD	0238/0389	07/29/1971	U		0	

PREVIOUS ASSESSMENTS (HISTORY)

Yr.	Code	Assessed Value	Yr.	Code	Assessed Value	Yr.	Code	Assessed Value
2009	21	377,300	2008	21	396,300	2004	21	396,300
2009	22	41,500	2008	22	39,400	2004	22	39,400
2009	25	246,500	2008	25	242,800	2004	25	242,800
	Total:	665,300		Total:	678,500		Total:	678,500

EXEMPTIONS

Year	Type	Description	Amount
		Total:	

OTHER ASSESSMENTS

Code	Description	Number	Amount	Comm. Int.

This signature acknowledges a visit by a Data Collector or Assessor

ASSESSING NEIGHBORHOOD

NBHD/ SUB	NBHD NAME	STREET INDEX NAME	TRACING	BATCH
0045/A				

NOTES

VETERANS MEMORIAL PARK
FN5=20 FT HGT BACKSTOPS
1 CONCRETE BASKETBALL
COURT
CNP1=PAVILLION ROOF
OVER GRASS
STORAGE GARAGE

APPRAISED VALUE SUMMARY

Appraised Bldg. Value (Card)	24,800
Appraised XF (B) Value (Bldg)	0
Appraised OB (L) Value (Bldg)	352,100
Appraised Land Value (Bldg)	539,000
Special Land Value	0
Total Appraised Parcel Value	950,300
Valuation Method:	C
Adjustment:	0
Net Total Appraised Parcel Value	**950,300**

BUILDING PERMIT RECORD

Permit ID	Issue Date	Type	Description	Amount	Insp. Date	% Comp.	Date Comp.	Comments

VISIT/ CHANGE HISTORY

Date	Type	IS	ID	Cd.	Purpose/Result
10/22/2009			KC	16	Reval Review
6/30/2009			JB	00	Measur+Listed
6/28/2002			TM	00	Measur+Listed

LAND LINE VALUATION SECTION

B #	Use Code	Use Description	Zone	D	Frontage	Depth	Units		Unit Price	I. Factor	S.A.	Acre Disc	C. Factor	ST. Idx	Adj.	Notes- Adj	Special Pricing	Adj. Unit Price	Land Value
1	9031	MUNICIPAL MDL96	R-4				0.46	AC	109,600.00	2.02	5	1.0000	1.00	0060	1.10				111,800
1	9030	MUNICIPAL MDL00	R-4				37.97	AC	15,000.00	1.00	0	1.0000	0.75	0045	1.00	TOPO			427,200

Total Card Land Units: 38.43 AC | Parcel Total Land Area: 38.43 AC | Total Land Value: 539,000

Property Location: BRUSHY PLAIN RD | MAP ID: D04/000 001/ 00025/ / | Bldg Name: | State Use: 903I

Vision ID: 494 | Account #011066 | Bldg #: 1 of 2 | Sec #: 1 of 1 | Card 1 of 3 | Print Date: 04/15/2010 08:39

CONSTRUCTION DETAIL

Element	Cd.	Ch.	Description
Style	48		Warehouse
Model	96		Ind/Comm
Grade	03		C
Stories	1		
Occupancy	1		
Exterior Wall 1	15		Concr/Cinder
Exterior Wall 2			
Roof Structure	03		Gable/Hip
Roof Cover	03		Asphalt
Interior Wall 1	01		Minim/Masonry
Interior Wall 2			
Interior Floor 1	03		Concr-Finished
Interior Floor 2			
Heating Fuel	04		Electric
Heating Type	03		Hot Air-no Duc
AC Type	01		None
Bldg Use	903I		MUNICIPAL MDL96
Total Rooms			
Total Bedrms	00		
Total Baths	0		
Heat/AC	02		HEAT/AC SPLIT
Frame Type	03		MASONRY
Baths/Plumbing	00		NONE
Ceiling/Wall	02		CEILING ONLY
Rooms/Prtns	02		AVERAGE
Wall Height	12		
% Comn Wall			

CONSTRUCTION DETAIL (CONTINUED)

Element	Cd.	Ch.	Description

MIXED USE

Code	Description	Percentage
903I	MUNICIPAL MDL96	100

COST/MARKET VALUATION

Adj. Base Rate:	51.92
Replace Cost	29,906
AYB	1988
Dep Code	A
Remodel Rating	
Year Remodeled	
Dep %	17
Functional Obsinc	0
External Obsinc	0
Cost Trend Factor	
Status	
% Complete	
Overall % Cond	83
Apprais Val	24,800
Dep % Ovr	0
Dep Ovr Comment	
Misc Imp Ovr	0
Misc Imp Ovr Comment	
Cost to Cure Ovr	0
Cost to Cure Ovr Comment	

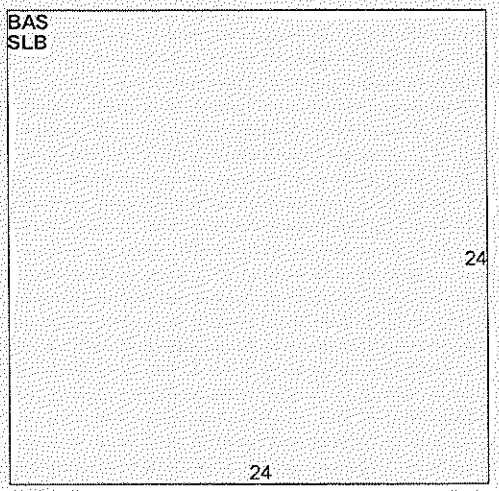

OB-OUTBUILDING & YARD ITEMS(L) / XF-BUILDING EXTRA FEATURES(B)

Code	Description	Sub	Sub Descript	L/B	Units	Unit Price	Yr	Gde	Dp Rt	Cnd	%Cnd	Apr Value
PAV1	PAVING-ASPI			L	35,000	1.65	2002		0		50	28,900
LT9	HGH PRE-SOI			L	6	1,500.00	2002		0		50	4,500
LT10	W/DOUBLE L			L	4	2,300.00	2002		0		50	4,600
LT12	W/FOUR LIGI			L	2	4,100.00	2002		0		50	4,100
LT10	W/DOUBLE L			L	2	2,300.00	2002		0		50	2,300
FN3	FENCE-6' CH/			L	2,880	9.90	2002		0		50	14,300
FN5	FENCE-10'CH			L	130	14.00	2002		0		50	900
CNP1	CANOPY, AV			L	620	8.00	2002		0		50	2,500
TEN1	TENNIS COUI			L	4	20,000.00	2002		0		50	40,000

BUILDING SUB-AREA SUMMARY SECTION

Code	Description	Living Area	Gross Area	Eff. Area	Unit Cost	Undeprec. Value
BAS	First Floor	576	576	576	51.92	29,906
SLB	Slab	0	576	0	0.00	0
	TtL Gross Liv/Lease Area:	576	1,152	576		29,906

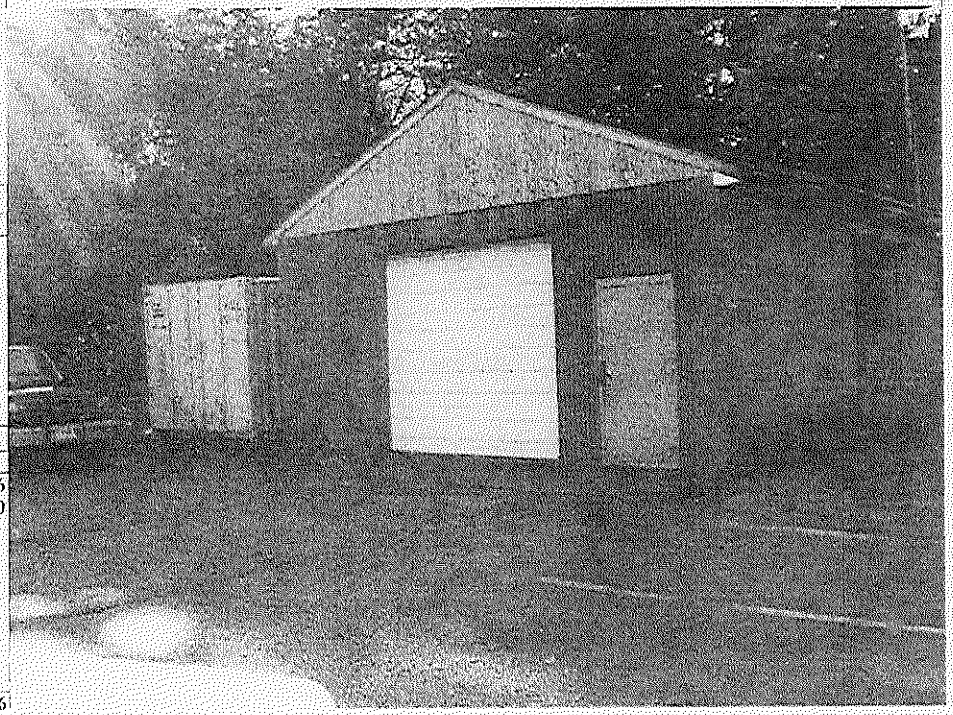

Property Location: BRUSHY PLAIN RD | MAP ID: D04/000 001/ 00025/ / | Bldg Name: | State Use: 9031

Vision ID: 494 | Bldg #: 1 of 2 | Sec #: 1 of 1 | Card 2 of 3 | Print Date: 04/15/2010 08:39

CURRENT OWNER	TOPO.	UTILITIES	STRT./ROAD	LOCATION
BRANFORD TOWN OF SOCCER FIEL				
1019 MAIN ST				
BRANFORD, CT 06405				
Additional Owners:				

SUPPLEMENTAL DATA

Other ID: D04/000/001/00025/

GIS ID: D04/000/001/00025 | ASSOC PID#

CURRENT ASSESSMENT

Description	Code	Appraised Value	Assessed Value
		Total	950,300	665,300

6014
BRANFORD, CT

VISION

RECORD OF OWNERSHIP	BK-VOL/PAGE	SALE DATE	q/u	v/i	SALE PRICE	V.C.

PREVIOUS ASSESSMENTS (HISTORY)

Yr.	Code	Assessed Value	Yr.	Code	Assessed Value	Yr.	Code	Assessed Value
Total:			Total:			Total:		

EXEMPTIONS

Year	Type	Description	Amount
		Total:	

OTHER ASSESSMENTS

Code	Description	Number	Amount	Comm. Int.

This signature acknowledges a visit by a Data Collector or Assessor

APPRAISED VALUE SUMMARY

Appraised Bldg. Value (Card)	24,800
Appraised XF (B) Value (Bldg)	0
Appraised OB (L) Value (Bldg)	352,100
Appraised Land Value (Bldg)	539,000
Special Land Value	0
Total Appraised Parcel Value	950,300
Valuation Method:	C
Adjustment:	0
Net Total Appraised Parcel Value	950,300

ASSESSING NEIGHBORHOOD

NBHD/ SUB	NBHD NAME	STREET INDEX NAME	TRACING	BATCH
0045/A				

NOTES

BUILDING PERMIT RECORD

Permit ID	Issue Date	Type	Description	Amount	Insp. Date	% Comp.	Date Comp.	Comments

VISIT/ CHANGE HISTORY

Date	Type	IS	ID	Cd.	Purpose/Result

LAND LINE VALUATION SECTION

B #	Use Code	Use Description	Zone	D	Frontage	Depth	Units	Unit Price	I. Factor	S.A.	C. Factor	ST. Idx	Adj.	Notes- Adj	Special Pricing	Adj. Unit Price	Land Value

Total Card Land Units: 0.00 AC | Parcel Total Land Area: 38.43 AC | Total Land Value: 0

Property Location: BRUSHY PLAIN RD | MAP ID: D04/000 001/ 00025/ / | Bldg Name: | State Use: 9031

Vision ID: 494 | Bldg #: 1 of 2 | Sec #: 1 of 1 | Card 2 of 3 | Print Date: 04/15/2010 08:39

CONSTRUCTION DETAIL			
Element	Cd.	Ch.	Description

CONSTRUCTION DETAIL (CONTINUED)			
Element	Cd.	Ch.	Description

MIXED USE		
Code	Description	Percentage
9031	MUNICIPAL MDL96	100

COST/MARKET VALUATION	
Cost Trend Factor	

No Photo On Record

OB-OUTBUILDING & YARD ITEMS(L) / XF-BUILDING EXTRA FEATURES(B)

Code	Description	Sub	Sub Descript	L/B	Units	Unit Price	Yr	Gde	Dp Rt	Cnd	%Cnd	Apr Value
	ATHLETIC FI			L	1	250,000.00	2002		0		100	250,000

BUILDING SUB-AREA SUMMARY SECTION

Code	Description	Living Area	Gross Area	Eff. Area	Unit Cost	Undeprec. Value
	Ttl. Gross Liv/Lease Area:	0	0	0		29,906

Property Location: BRUSHY PLAIN RD | MAP ID: D04/000 001/ 00025/ / | Bldg Name: | State Use: 9031

Vision ID: 494 | Account # 011066 | Bldg #: 2 of 2 | Sec #: 1 of 1 | Card 3 of 3 | Print Date: 04/15/2010 08:39

CURRENT OWNER	TOPO.	UTILITIES	STRT./ROAD	LOCATION
BRANFORD TOWN OF SOCCER FIEL	1 Level	2 Public Water	1 Paved	2 Suburban
1019 MAIN ST	4 Rolling	3 Public Sewer	5 Curb & Gutter	6 Recreational
			6 Sidewalk	
BRANFORD, CT 06405	SUPPLEMENTAL DATA			
Additional Owners:	Other ID: D04/000/001/00025/		HLDG TK	
	CONDO BLDG		SEPTIC	
	CONDO UNIT		SEWER	
	CONDO FLOOI		DISTRICT	
			CENSUS TR 1847	
	GIS ID: D04/000/001/00025		ASSOC PID#	

CURRENT ASSESSMENT

Description	Code	Appraised Value	Assessed Value
EX COM LN	21	539,000	377,300
EX COM BL	22	59,200	41,500
EX CM OTB	25	352,100	246,500
	Total	950,300	665,300

6014
BRANFORD, CT

VISION

RECORD OF OWNERSHIP	BK-VOL/PAGE	SALE DATE	q/u	v/i	SALE PRICE	V.C.
BRANFORD TOWN OF SOCCER FIELD	0238/0389	07/29/1971	U		0	

PREVIOUS ASSESSMENTS (HISTORY)

Yr.	Code	Assessed Value	Yr.	Code	Assessed Value	Yr.	Code	Assessed Value
2009	21	377,300	2008	21	396,300	2004	21	396,300
2009	22	41,500	2008	22	39,400	2004	22	39,400
2009	25	246,500	2008	25	242,800	2004	25	242,800
	Total:	665,300		Total:	678,500		Total:	678,500

EXEMPTIONS

Year	Type	Description	Amount
		Total:	

OTHER ASSESSMENTS

Code	Description	Number	Amount	Comm. Int.

This signature acknowledges a visit by a Data Collector or Assessor

ASSESSING NEIGHBORHOOD

NBHD/ SUB	NBHD NAME	STREET INDEX NAME	TRACING	BATCH
0045/A				

NOTES

PUBLIC RESTROOMS +
STORAGE

APPRAISED VALUE SUMMARY

Appraised Bldg. Value (Card)	34,400
Appraised XF (B) Value (Bldg)	0
Appraised OB (L) Value (Bldg)	0
Appraised Land Value (Bldg)	0
Special Land Value	0
Total Appraised Parcel Value	950,300
Valuation Method:	C
Adjustment:	0
Net Total Appraised Parcel Value	**950,300**

BUILDING PERMIT RECORD

Permit ID	Issue Date	Type	Description	Amount	Insp. Date	% Comp.	Date Comp.	Comments

VISIT/ CHANGE HISTORY

Date	Type	IS	ID	Cd.	Purpose/Result
10/22/2009			KC	16	Reval Review
6/30/2009			JB	00	Measur+Listed
6/28/2002			TM	00	Measur+Listed

LAND LINE VALUATION SECTION

B #	Use Code	Use Description	Zone	D	Frontage	Depth	Units		Unit Price	I. Factor	S.A.	Acre Disc	C. Factor	ST. Idx	Adj.	Notes- Adj	Special Pricing	Adj. Unit Price	Land Value
2	9031	MUNICIPAL MDL96	R-4				0.00	AC	0.00	1.00	0	1.0000	1.00		0.00				0

Total Card Land Units: 0.00 AC | Parcel Total Land Area: 38.43 AC | Total Land Value: 0

Property Location: BRUSHY PLAIN RD **MAP ID:** D04/000 001/ 00025/ / **Bldg Name:** **State Use:** 9031

Vision ID: 494 **Account #** 011066 **Bldg #:** 2 of 2 **Sec #:** 1 of 1 **Card** 3 of 3 **Print Date:** 04/15/2010 08:39

CONSTRUCTION DETAIL

Element	Cd.	Ch.	Description
Style	12		Commercial
Model	96		Ind/Comm
Grade	03		C
Stories	1		
Occupancy	1		
Exterior Wall 1	15		Concr/Cinder
Exterior Wall 2			
Roof Structure	01		Flat
Roof Cover	04		T&G/Rubber
Interior Wall 1	01		Minim/Masonry
Interior Wall 2			
Interior Floor 1	03		Concr-Finished
Interior Floor 2			
Heating Fuel	04		Electric
Heating Type	03		Hot Air-no Duc
AC Type	01		None
Bldg Use	9031		MUNICIPAL MDL96
Total Rooms			
Total Bedrms	00		
Total Baths	0		
Heat/AC	02		HEAT/AC SPLIT
Frame Type	03		MASONRY
Baths/Plumbing	04		EXTENSIVE
Ceiling/Wall	06		CEIL & WALLS
Rooms/Prtns	02		AVERAGE
Wall Height	12		
% Comn Wall			

CONSTRUCTION DETAIL (CONTINUED)

Element	Cd.	Ch.	Description

MIXED USE

Code	Description	Percentage
9031	MUNICIPAL MDL96	100

COST/MARKET VALUATION

Adj. Base Rate:	78.29
Replace Cost	41,415
AYB	1988
Dep Code	A
Remodel Rating	
Year Remodeled	
Dep %	17
Functional Obsinc	0
External Obsinc	0
Cost Trend Factor	
Status	
% Complete	
Overall % Cond	83
Apprais Val	34,400
Dep % Ovr	0
Dep Ovr Comment	
Misc Imp Ovr	0
Misc Imp Ovr Comment	
Cost to Cure Ovr	0
Cost to Cure Ovr Comment	

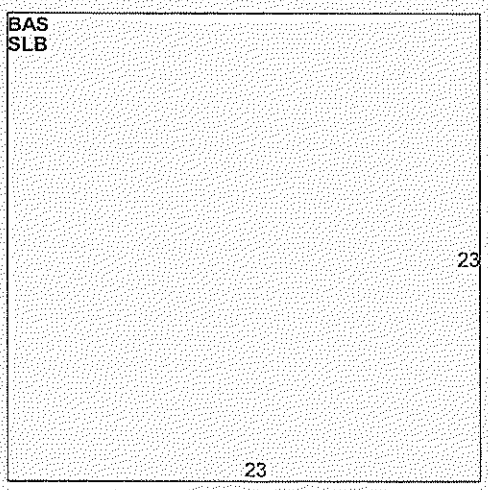

OB-OUTBUILDING & YARD ITEMS(L) / XF-BUILDING EXTRA FEATURES(B)

Code	Description	Sub	Sub Descript	L/B	Units	Unit Price	Yr	Gde	Dp Rt	Cnd	%Cnd	Apr Value

BUILDING SUB-AREA SUMMARY SECTION

Code	Description	Living Area	Gross Area	Eff. Area	Unit Cost	Undeprec. Value
BAS	First Floor	529	529	529	78.29	41,415
SLB	Slab	0	529	0	0.00	0
	TtL Gross Liv/Lease Area:	529	1,058	529		41,415

MAP SCALE 1" = 500'

250 0 500 1000 FEET

METER 0 150 300

PANEL 0462H

NATIONAL FLOOD INSURANCE PROGRAM

FIRM

FLOOD INSURANCE RATE MAP

NEW HAVEN COUNTY, CONNECTICUT

(ALL JURISDICTIONS)

PANEL 462 OF 635

(SEE MAP INDEX FOR FIRM PANEL LAYOUT)

CONTAINS:

COMMUNITY	NUMBER	PANEL	SUFFIX
BRANFORD, TOWN OF	090073	0462	H
EAST HAVEN, TOWN OF	090076	0462	H

Notice to User: The **Map Number** shown below should be used when placing map orders; the **Community Number** shown above should be used on insurance applications for the subject community.

MAP NUMBER
09009C0462H

EFFECTIVE DATE
DECEMBER 17, 2010

Federal Emergency Management Agency

This is an official copy of a portion of the above referenced flood map. It was extracted using F-MIT On-Line. This map does not reflect changes or amendments which may have been made subsequent to the date on the title block. For the latest product information about National Flood Insurance Program flood maps check the FEMA Flood Map Store at www.msc.fema.gov

Town of Branford

Geographic Information System (GIS)

Date Printed: 10/24/2011

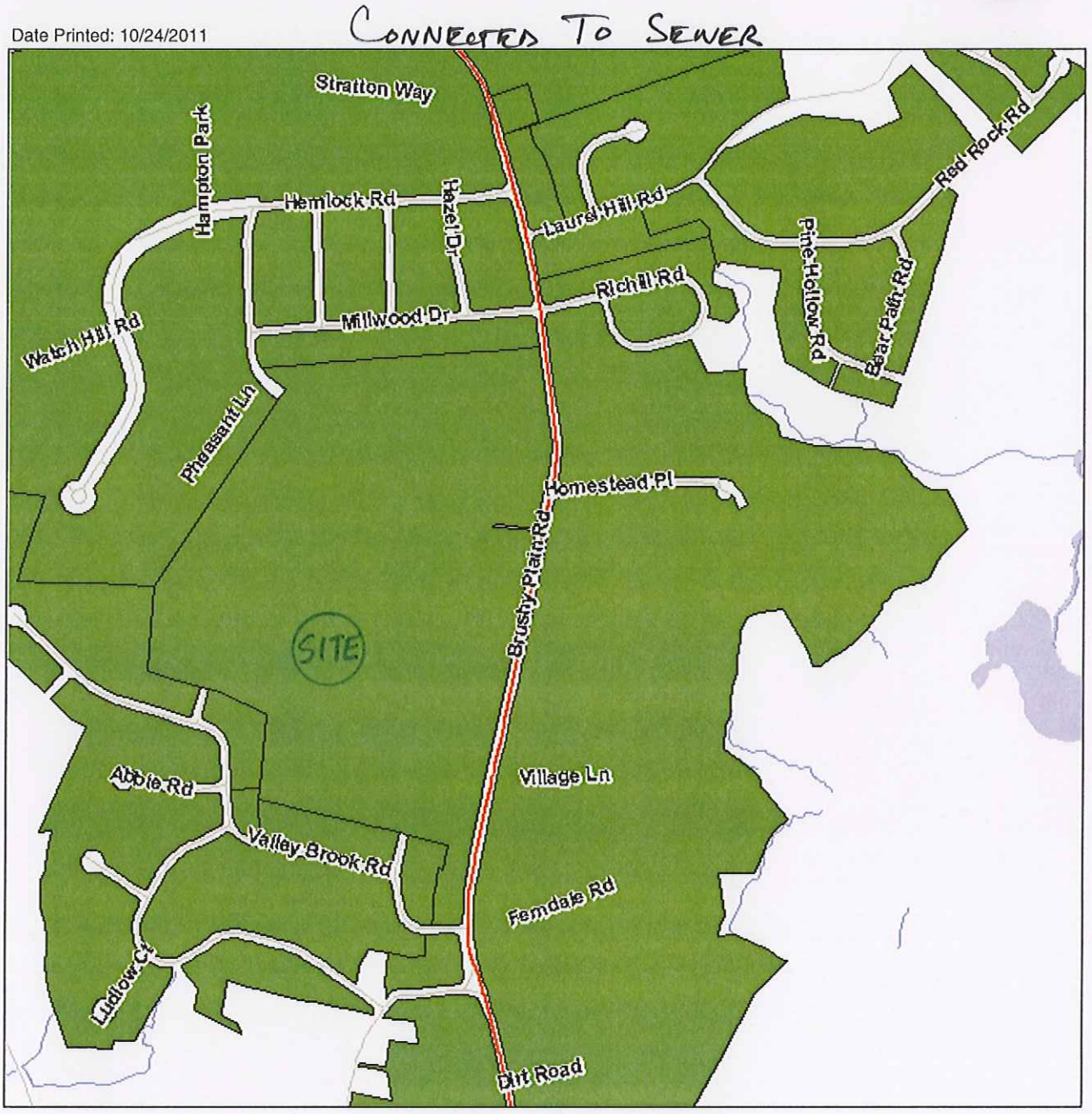

MAP DISCLAIMER - NOTICE OF LIABILITY

This map is for assessment purposes only. It is not for legal description or conveyances. All information is subject to verification by any user. The Town of Branford and its mapping contractors assume no legal responsibility for the information contained herein.

0 800 Feet

N W E S

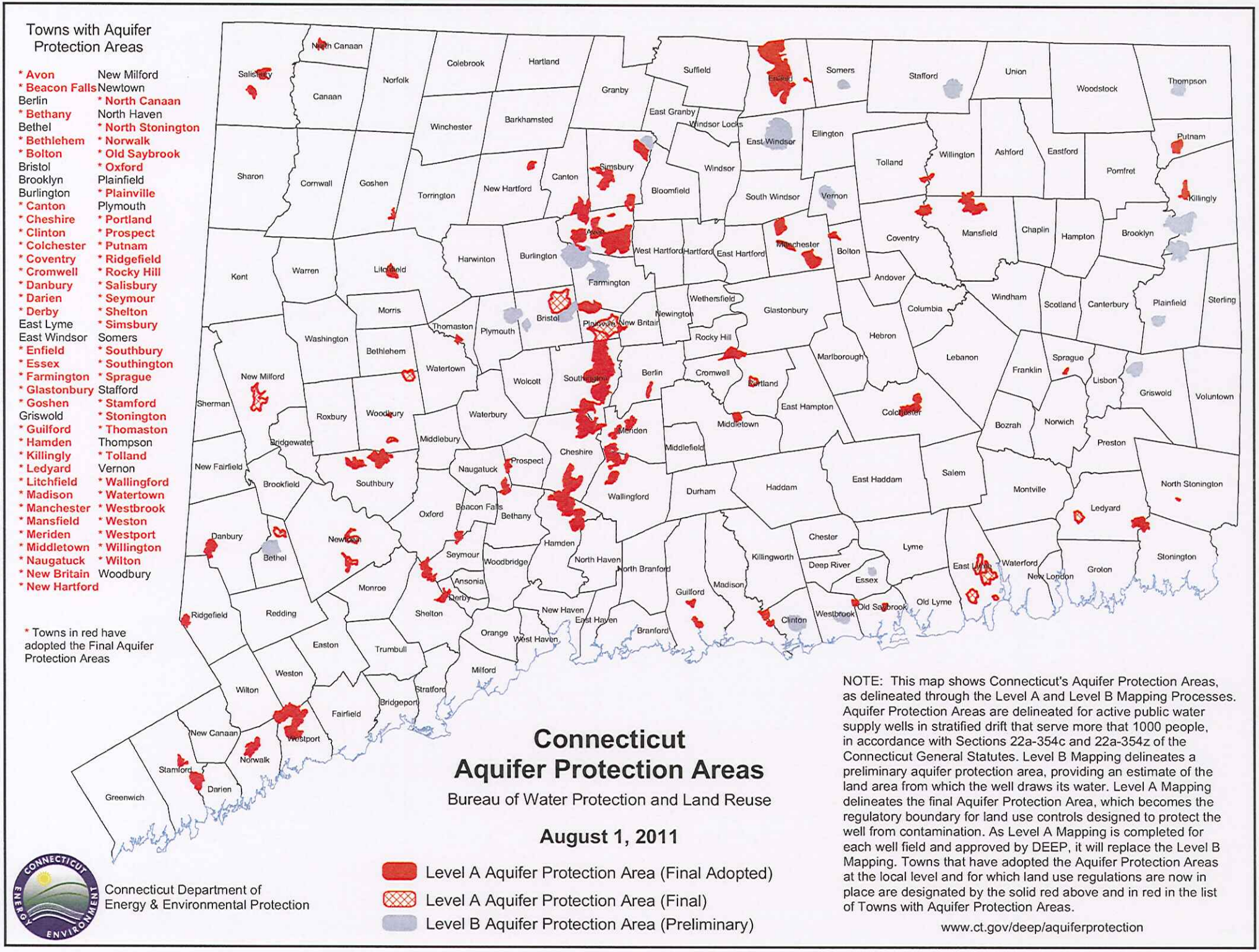
Towns with Aquifer Protection Areas
* Avon
* Beacon Falls
Berlin
* Bethany
Bethel
* Bethlehem
* Bolton
Bristol
Brooklyn
Burlington
* Canton
* Cheshire
* Clinton
* Colchester
* Coventry
* Cromwell
* Danbury
* Darien
* Derby
East Lyme
East Windsor
* Enfield
* Essex
* Farmington
* Glastonbury
* Goshen
Griswold
* Guilford
* Hamden
* Killingly
* Ledyard
* Litchfield
* Madison
* Manchester
* Mansfield
* Meriden
* Middletown
* Naugatuck
* New Britain
* New Hartford
New Milford
Newtown
* North Canaan
North Haven
* North Stonington
* Norwalk
* Old Saybrook
* Oxford
Plainfield
* Plainville
Plymouth
* Portland
* Prospect
* Putnam
* Ridgefield
* Rocky Hill
* Salisbury
* Seymour
* Shelton
* Simsbury
Somers
* Southbury
* Southington
* Sprague
Stafford
* Stamford
* Stonington
* Thomaston
Thompson
* Tolland
Vernon
* Wallingford
* Watertown
* Westbrook
* Weston
* Westport
* Willington
Wilton
Woodbury
* Towns in red have adopted the Final Aquifer Protection Areas
Connecticut Aquifer Protection Areas
Bureau of Water Protection and Land Reuse
August 1, 2011
Level A Aquifer Protection Area (Final Adopted)
Level A Aquifer Protection Area (Final)
Level B Aquifer Protection Area (Preliminary)
NOTE: This map shows Connecticut's Aquifer Protection Areas, as delineated through the Level A and Level B Mapping Processes. Aquifer Protection Areas are delineated for active public water supply wells in stratified drift that serve more that 1000 people, in accordance with Sections 22a-354c and 22a-354z of the Connecticut General Statutes. Level B Mapping delineates a preliminary aquifer protection area, providing an estimate of the land area from which the well draws its water. Level A Mapping delineates the final Aquifer Protection Area, which becomes the regulatory boundary for land use controls designed to protect the well from contamination. As Level A Mapping is completed for each well field and approved by DEEP, it will replace the Level B Mapping. Towns that have adopted the Aquifer Protection Areas at the local level and for which land use regulations are now in place are designated by the solid red above and in red in the list of Towns with Aquifer Protection Areas.
www.ct.gov/deep/aquiferprotection
Connecticut Department of Energy & Environmental Protection

Natural Diversity Data Base Areas

BRANFORD, CT

July 2011

State and Federal Listed Species & Significant Natural Communities

Town Boundary

NOTE: This map shows general locations of State and Federal Listed Species and Significant Natural Communities. Information on listed species is collected and compiled by the Natural Diversity Data Base (NDDB) from a number of data sources . Exact locations of species have been buffered to produce the general locations. Exact locations of species and communities occur somewhere in the shaded areas, not necessarily in the center.

This map is intended for use as a preliminary screening tool for conducting a Natural Diversity Data Base Review Request. To use the map, locate the project boundaries and any additional affected areas. If the project is within a shaded area; or overlapping a lake, pond or wetland that has shading; or upstream or downstream (by less than 1/2 mile) from a shaded area, the project may have a potential conflict with a listed species. For more information, complete a Request for Natural Diversity Data Base State Listed Species Review form (DEP-APP-007), and submit it to the NDDB along with the required maps and information. More detailed instructions are provided with the request form on our website.

www.ct.gov/dep/nddbrequest

This file has PDF Layers. Look for the Layers tab on the left. Expand the layers and use the "eye" icons to change visibility.

QUESTIONS: Department of Energy and Environmental Protection (DEEP)
79 Elm St., Hartford CT 06106
Phone (860) 424-3011

Connecticut Department of Energy & Environmental Protection
Bureau of Natural Resources
Wildlife Division

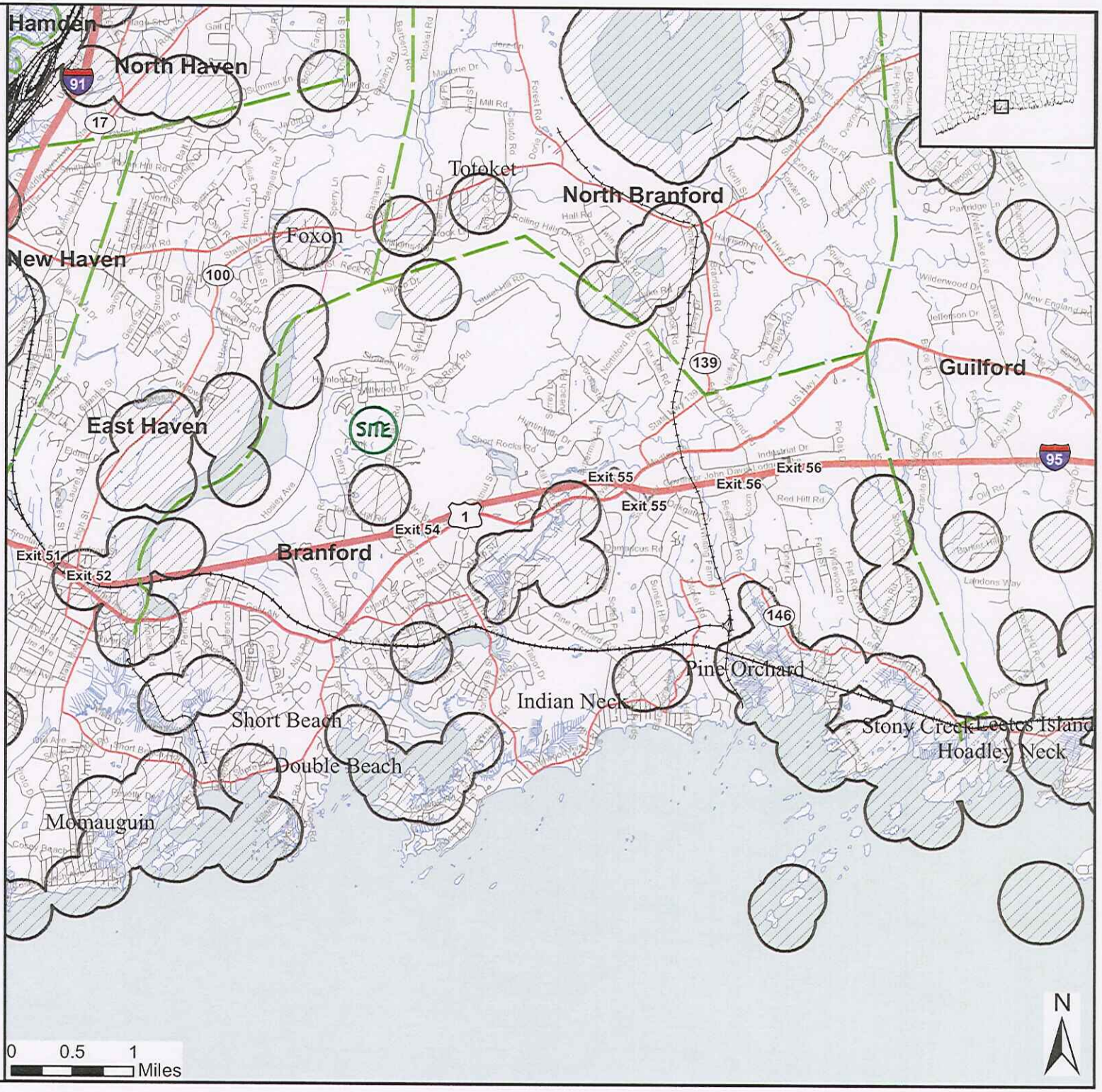

Town of Branford, CT
DPW Site Selection Study

PP-1: 15/21 East Industrial Road

Front of building at 15 East Industrial Road

Back of building at 15 East Industrial Road

Town of Branford, CT
DPW Site Selection Study
PP-1: 15/21 East Industrial Road
October 2011

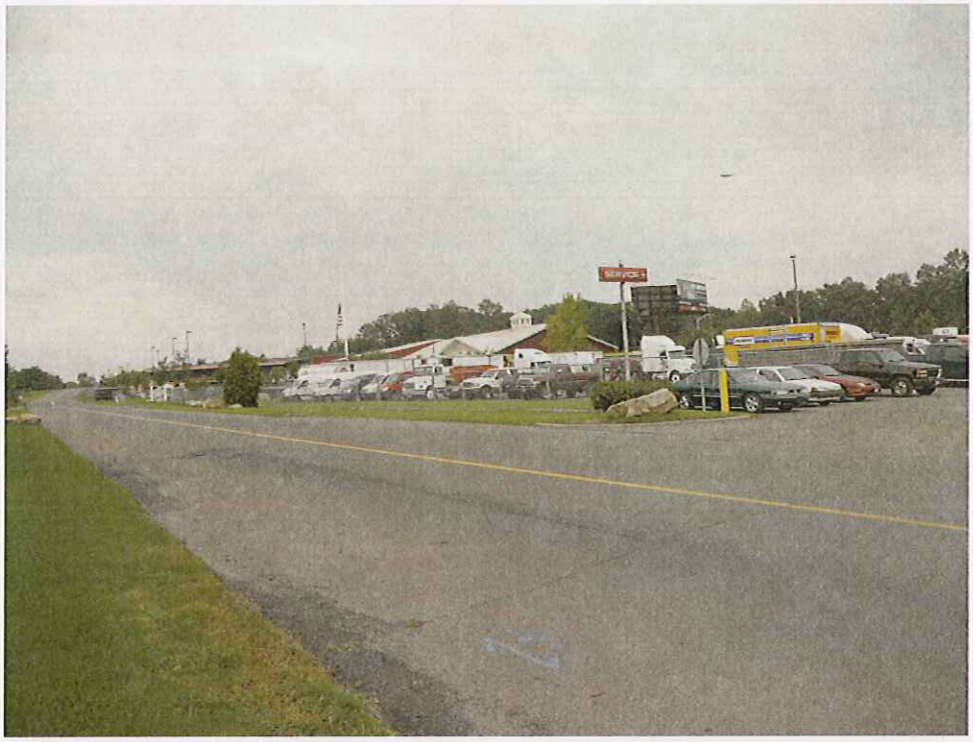

Front portion of 21 East Industrial Road

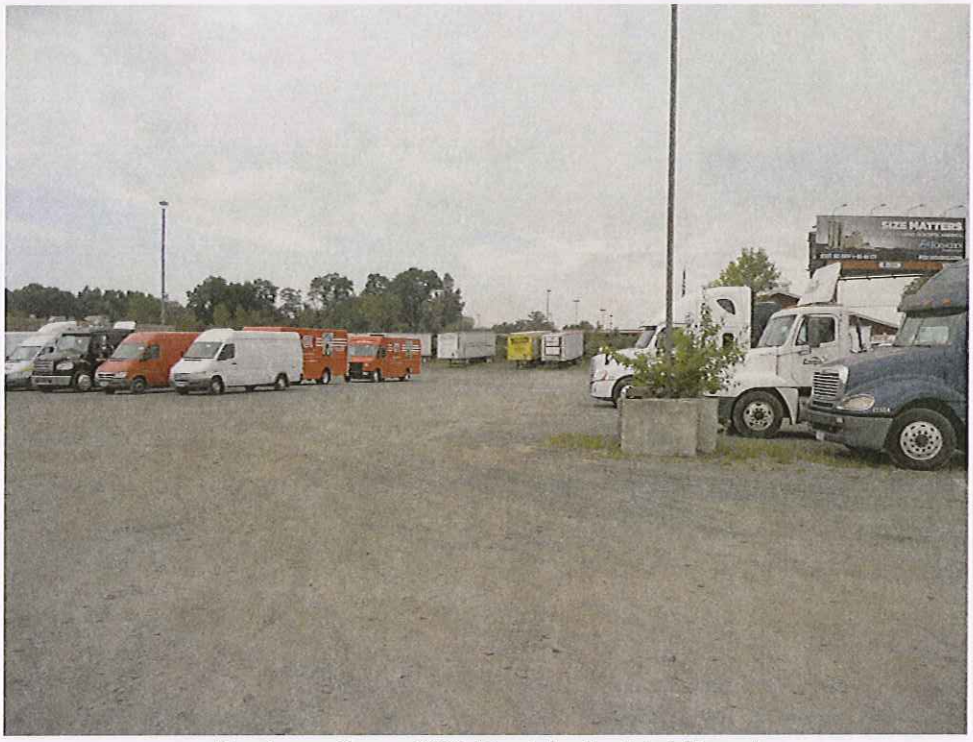

Back portion of 21 East Industrial Road

Town of Branford, CT
DPW Site Selection Study
PP-1: 15/21 East Industrial Road
October 2011

Town of Branford

Geographic Information System (GIS)

Date Printed: 9/13/2011

WETLANDS

MAP DISCLAIMER - NOTICE OF LIABILITY

This map is for assessment purposes only. It is not for legal description or conveyances. All information is subject to verification by any user. The Town of Branford and its mapping contractors assume no legal responsibility for the information contained herein.

0 200 Feet

N W E S

Town of Branford

Geographic Information System (GIS)

Date Printed: 9/13/2011

ZONING

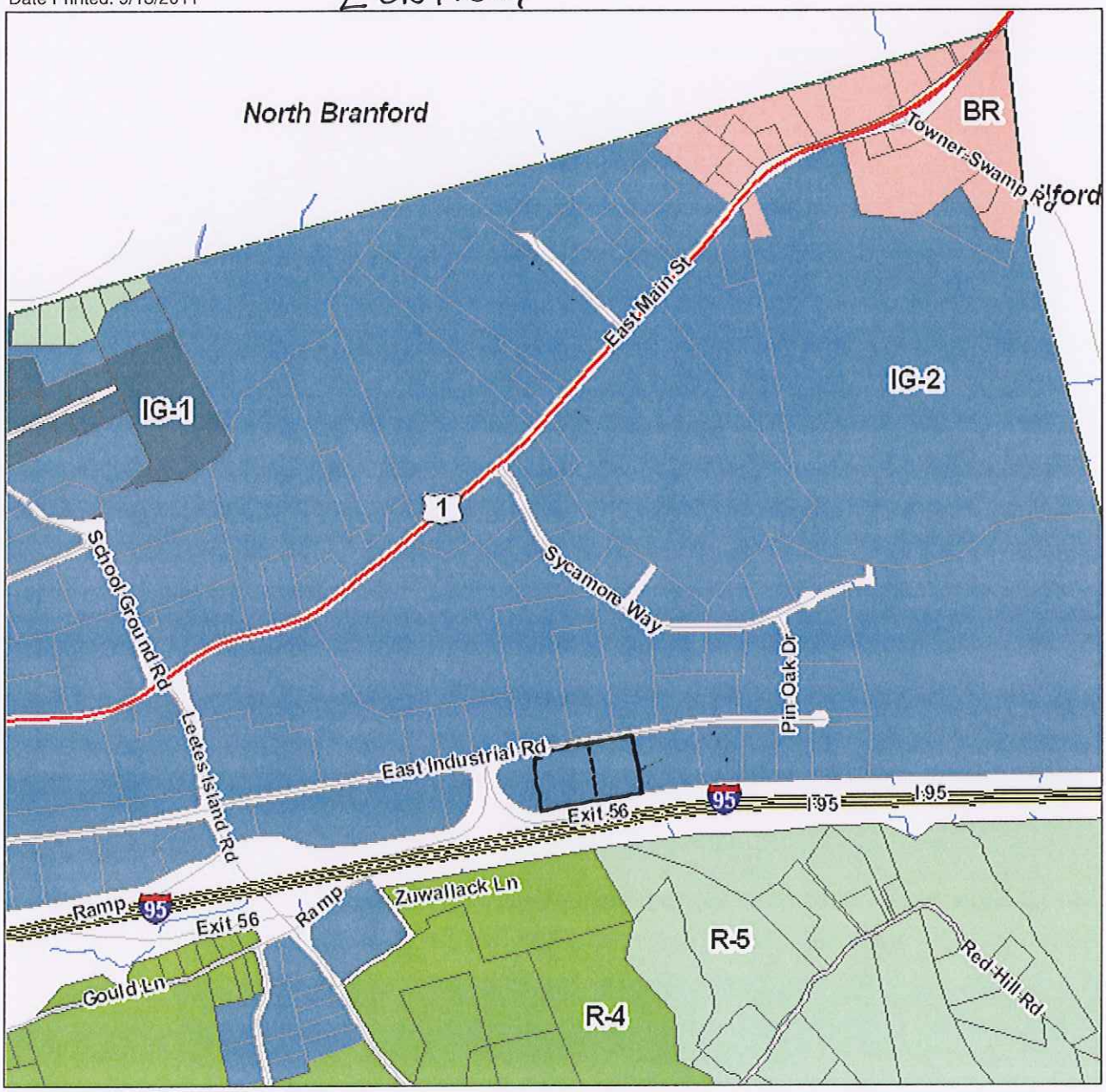

MAP DISCLAIMER - NOTICE OF LIABILITY

This map is for assessment purposes only. It is not for legal description or conveyances. All information is subject to verification by any user. The Town of Branford and its mapping contractors assume no legal responsibility for the information contained herein.

0 1,000 Feet

N W E S

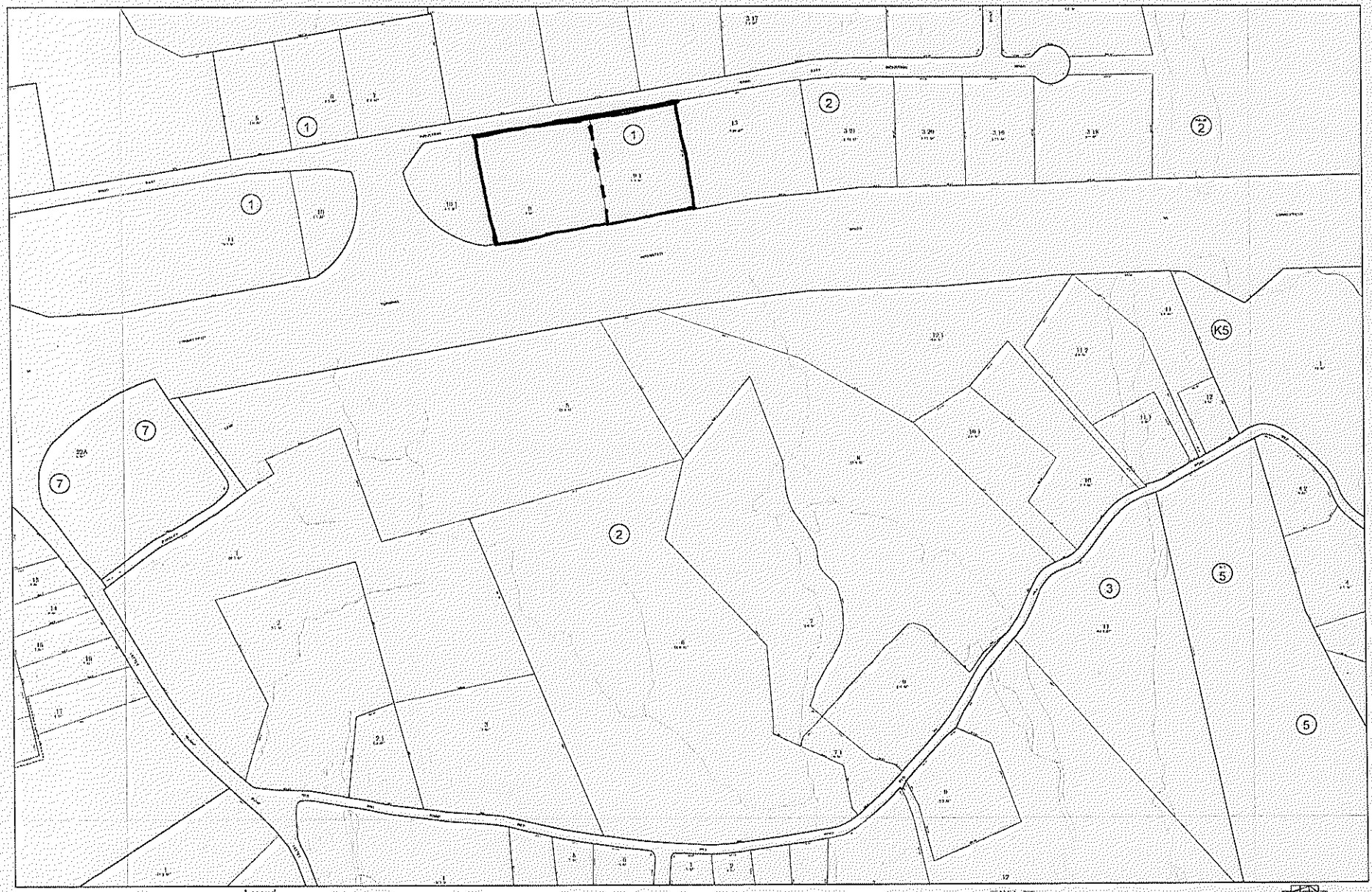

Legend

- Railroad Tracks
- ROW / Easement Boundary
- Water Feature (Swamp, Pond, River, Lake)
- Mean High Water Level
- Property Lines as of December 2002
- Block Boundary
- Town Boundary
- Measured Dimensions
- Source Map Dimensions
- Building Structure
- Block Number
- Lot Number
- Acreage

ASSESSMENT MAP OF THE TOWN OF BRANFORD, CONNECTICUT 2007

DATES OF AERIAL PHOTOGRAPHY: MARCH 29 AND APRIL 6, 1999

MAP PRINTED JANUARY 2008

SCALE 1 = 200'

100 50 0 100 200 300 400 500 Feet

This map is for informational purposes only. All information is subject to verification by any user. The Town of Branford and its mapping contractors assume no legal responsibility for the information contained herein.

Map: J05

H04	J04	K04
H05		K05
H06	J06	K06

Property Location: 15 EAST INDUSTRIAL RD **MAP ID:** J05/000 001/ 00009/ / **Bldg Name:** **State Use:** 330I

Vision ID: 1246 **Account #** 003401 **Bldg #:** 1 of 1 **Sec #:** 1 of 1 **Card** 1 of 1 **Print Date:** 04/15/2010 09:33

CURRENT OWNER	TOPO.	UTILITIES	STRT./ROAD	LOCATION
N + B HOLDINGS L L C	1 Level	1 All Public	1 Paved	5 Industrial
114 SCHOOL GROUND RD		3 Public Sewer	5 Curb & Gutter	
BRANFORD, CT 06405				
Additional Owners:				

SUPPLEMENTAL DATA

Other ID:	J05/000/001/00009/	HLDG TK	
CONDO BLDG		SEPTIC	
CONDO UNIT		SEWER	
CONDO FLOOI		DISTRICT	
		CENSUS TR	1847
GIS ID:	J05/000/001/00009	*ASSOC PID#*	

CURRENT ASSESSMENT

Description	Code	Appraised Value	Assessed Value
COM LAND	2-1	1,201,600	841,100
COM BLDG	2-2	1,286,100	900,200
COM OUTBL	2-5	28,200	19,700
VAC CM LN	5-2	80,000	56,000
	Total	2,595,900	1,817,000

6014
BRANFORD, CT

VISION

RECORD OF OWNERSHIP	BK-VOL/PAGE	SALE DATE	q/u	v/i	SALE PRICE	V.C.
N + B HOLDINGS L L C	0631/0150	08/01/1997				

PREVIOUS ASSESSMENTS (HISTORY)

Yr.	Code	Assessed Value	Yr.	Code	Assessed Value	Yr.	Code	Assessed Value
2009	2-1	841,100	2008	2-1	841,100	2004	2-1	841,100
2009	2-2	900,200	2008	2-2	899,500	2004	2-2	899,500
2009	2-5	19,700	2008	2-5	18,000	2004	2-5	18,000
2009	5-2	56,000						
	Total:	1,817,000		*Total:*	1,758,600		*Total:*	1,758,600

EXEMPTIONS

Year	Type	Description	Amount
		Total:	

OTHER ASSESSMENTS

Code	Description	Number	Amount	Comm. Int.

This signature acknowledges a visit by a Data Collector or Assessor

APPRAISED VALUE SUMMARY

Appraised Bldg. Value (Card)	1,202,200
Appraised XF (B) Value (Bldg)	83,900
Appraised OB (L) Value (Bldg)	28,200
Appraised Land Value (Bldg)	1,281,600
Special Land Value	0
Total Appraised Parcel Value	2,595,900
Valuation Method:	C
Adjustment:	0
Net Total Appraised Parcel Value	2,595,900

ASSESSING NEIGHBORHOOD

NBHD/ SUB	NBHD NAME	STREET INDEX NAME	TRACING	BATCH
400/A				

NOTES

FREIGHTLINER TRUCKS SALES + SVC
8 SERVICE BAYS
2 TRUCK WASH BAYS
GAS FHA/ A/C HVAC ROOF
UNITS IN AOF + RETAIL

GIR2=190 L.F. X2, 1 TEN
TON O.H. CRANE
MEZ1 (2672)=METAL GRADE
ECO=MKT

BUILDING PERMIT RECORD

Permit ID	Issue Date	Type	Description	Amount	Insp. Date	% Comp.	Date Comp.	Comments

VISIT/ CHANGE HISTORY

Date	Type	IS	ID	Cd.	Purpose/Result
10/21/2009			JWS	16	Reval Review
4/30/2009			GM	00	Measur+Listed
10/14/2004			BD	16	Reval Review
7/20/2002			TM	00	Measur+Listed

LAND LINE VALUATION SECTION

B #	Use Code	Use Description	Zone	D	Frontage	Depth	Units		Unit Price	I. Factor	S.A.	Acre Disc	C. Factor	ST. Idx	Adj.	Notes- Adj	Special Pricing	Adj. Unit Price	Land Value
1	3301	AUTO DLR MDL96	IG-2				1.38	AC	229,200.00	0.81	1	1.0000	3.40	400	1.00	+HWY			867,000
1	3301	AUTO DLR MDL96					1.64	AC	75,000.00	1.00	0	1.0000	2.72	400	1.00	+HWY-20%WET			334,600
1	3940	BILLBRDLND					2.00	BL	40,000.00	1.00	0	1.0000	1.00		0.00	DBL			80,000

Total Card Land Units: 3.02 AC **Parcel Total Land Area:** 3.02 AC **Total Land Value:** 1,281,600

Property Location: 15 EAST INDUSTRIAL RD **MAP ID:** J05/000 001/ 00009/ / **Bldg Name:** **State Use:** 330I

Vision ID: 1246 **Account #** 003401 **Bldg #:** 1 of 1 **Sec #:** 1 of 1 **Card** 1 of 1 **Print Date:** 04/15/2010 09:33

CONSTRUCTION DETAIL

Element	Cd.	Ch.	Description
Style	27		Car Dealrshp
Model	96		Ind/Comm
Grade	06		B
Stories	1		
Occupancy	1		
Exterior Wall 1	15		Concr/Cinder
Exterior Wall 2			
Roof Structure	01		Flat
Roof Cover	04		T&G/Rubber
Interior Wall 1	05		Drywall
Interior Wall 2	01		Minim/Masonry
Interior Floor 1	03		Concr-Finished
Interior Floor 2			
Heating Fuel	02		Oil
Heating Type	03		Hot Air-no Duc
AC Type	01		None
Bldg Use	330I		AUTO DLR MDL96
Total Rooms			
Total Bedrms	00		
Total Baths	0		
Heat/AC	02		HEAT/AC SPLIT
Frame Type	05		LT STEEL
Baths/Plumbing	02		AVERAGE
Ceiling/Wall	03		SUS-CEIL/MN WL
Rooms/Prtns	02		AVERAGE
Wall Height	22		
% Comn Wall			

CONSTRUCTION DETAIL (CONTINUED)

Element	Cd.	Ch.	Description

MIXED USE

Code	Description	Percentage
330I	AUTO DLR MDL96	100

COST/MARKET VALUATION

Adj. Base Rate:	67.93
Replace Cost	2,003,652
AYB	1950
Dep Code	G
Remodel Rating	
Year Remodeled	
Dep %	35
Functional Obsinc	
External Obsinc	5
Cost Trend Factor	
Status	
% Complete	
Overall % Cond	60
Apprais Val	1,202,200
Dep % Ovr	0
Dep Ovr Comment	
Misc Imp Ovr	0
Misc Imp Ovr Comment	
Cost to Cure Ovr	0
Cost to Cure Ovr Comment	

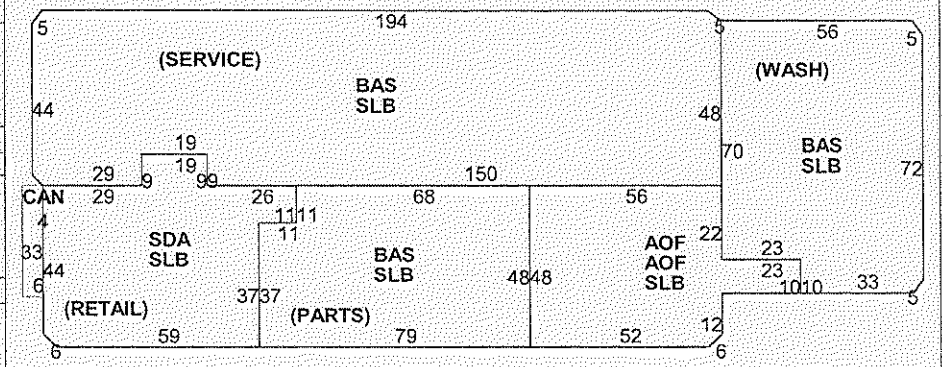

OB-OUTBUILDING & YARD ITEMS(L) / XF-BUILDING EXTRA FEATURES(B)

Code	Description	Sub	Sub Descript	L/B	Units	Unit Price	Yr	Gde	Dp Rt	Cnd	%Cnd	Apr Value
PAV1	PAVING-ASPI			L	25,100	1.65	2002		0		50	20,700
PAV2	PAVING-CON			L	1,344	3.30	2002		0		50	2,200
LT9	HGH PRE-SOI			L	7	1,500.00	2002		0		50	5,300
MEZ1	MEZZANINE-			B	1,684	10.00	1974		1		100	10,100
MEZ1	MEZZANINE-			B	2,672	10.00	1974		1		100	16,000
MEZ3	W/PARTITIOI			B	1,054	22.00	1974		1		100	13,900
SPR1	SPRINKLERS-			B	32,07	1.00	1974		1		100	19,200
A/C	AIR CONDITI			B	11,80	2.20	1974		1		100	15,600
GIR2	GIRDERS 13"			B	380	40.00	1974		1		100	9,100

BUILDING SUB-AREA SUMMARY SECTION

Code	Description	Living Area	Gross Area	Eff. Area	Unit Cost	Undeprec. Value
AOF	Office	5,820	5,820	7,275	84.91	494,154
BAS	First Floor	18,213	18,213	18,213	67.93	1,237,118
CAN	Canopy	0	198	40	13.72	2,717
SDA	Store Display Area	3,308	3,308	3,970	81.52	269,662
SLB	Slab	0	24,431	0	0.00	0
	Ttl. Gross Liv/Lease Area:	27,341	51,970	29,498		2,003,652

Property Location: 21 EAST INDUSTRIAL RD | MAP ID: J05/000 001/ 009.1/ / | Bldg Name: | State Use: 440V

Vision ID: 1250 | Account # 003404 | Bldg #: 1 of 1 | Sec #: 1 of 1 | Card 1 of 1 | Print Date: 04/15/2010 09:33

CURRENT OWNER	TOPO.	UTILITIES	STRT./ROAD	LOCATION
N+B HOLDINGS L.L.C.	1 Level	1 All Public	1 Paved	5 Industrial
114 SCHOOLGROUND RD		3 Public Sewer	5 Curb & Gutter	
BRANFORD, CT 06405				
Additional Owners:				

SUPPLEMENTAL DATA

Other ID:	J05/000/001/009.1/	HLDG TK	
CONDO BLDG		SEPTIC	
CONDO UNIT		SEWER	
CONDO FLOOI		DISTRICT	
		CENSUS TR 1847	
GIS ID:	J05/000/001/009.1	ASSOC PID#	

CURRENT ASSESSMENT

Description	Code	Appraised Value	Assessed Value
IND LAND	3-1	534,500	374,200
IND IMPR	3-3	6,000	4,300
	Total	540,500	378,500

6014
BRANFORD, CT

VISION

RECORD OF OWNERSHIP

	BK-VOL/PAGE	SALE DATE	q/u	v/i	SALE PRICE	V.C.
N+B HOLDINGS L.L.C.	0631/0150	12/16/1997				
FUSCO CORPORATION THE	0325/0129					

PREVIOUS ASSESSMENTS (HISTORY)

Yr.	Code	Assessed Value	Yr.	Code	Assessed Value	Yr.	Code	Assessed Value
2009	3-1	374,200	2008	3-1	327,100	2004	3-1	327,100
2009	3-3	4,300	2008	3-3	3,900	2004	3-3	3,900
	Total:	378,500		Total:	331,000		Total:	331,000

EXEMPTIONS

Year	Type	Description	Amount
		Total:	

OTHER ASSESSMENTS

Code	Description	Number	Amount	Comm. Int.

This signature acknowledges a visit by a Data Collector or Assessor

ASSESSING NEIGHBORHOOD

NBHD/ SUB	NBHD NAME	STREET INDEX NAME	TRACING	BATCH
400/A				

NOTES

ACCESSORY LOT FOR FREIGHTLINER TRUCKS

FN3 FOR LOTS 9 + 9.1

APPRAISED VALUE SUMMARY

Appraised Bldg. Value (Card)	0
Appraised XF (B) Value (Bldg)	0
Appraised OB (L) Value (Bldg)	6,000
Appraised Land Value (Bldg)	534,500
Special Land Value	0
Total Appraised Parcel Value	540,500
Valuation Method:	C
Adjustment:	0
Net Total Appraised Parcel Value	540,500

BUILDING PERMIT RECORD

Permit ID	Issue Date	Type	Description	Amount	Insp. Date	% Comp.	Date Comp.	Comments

VISIT/ CHANGE HISTORY

Date	Type	IS	ID	Cd.	Purpose/Result
10/21/2009			JWS	16	Reval Review
4/30/2009			GM	00	Measur+Listed
10/14/2004			BD	16	Reval Review
4/26/2002			TM	00	Measur+Listed

LAND LINE VALUATION SECTION

B #	Use Code	Use Description	Zone	D	Frontage	Depth	Units	Unit Price	I. Factor	S.A.	Acre Disc	C. Factor	ST. Idx	Adj.	Notes- Adj	Special Pricing	Adj. Unit Price	Land Value
1	440V	IND LD DV MDL00	IG-2				1.38 AC	229,200.00	0.81	1	1.0000	1.70	400	1.00	RT 95			433,500
1	440V	IND LD DV MDL00					0.88 AC	75,000.00	1.00	0	1.0000	1.53	400	1.00	TOPO-10%			101,000

Total Card Land Units: 2.26 AC | Parcel Total Land Area: 2.26 AC | Total Land Value: 534,500

Property Location: 21 EAST INDUSTRIAL RD *MAP ID:* J05/000 001/ 009.1/ / *Bldg Name:* *State Use:* 440V

Vision ID: 1250 *Account #* 003404 *Bldg #:* 1 of 1 *Sec #:* 1 *of* 1 *Card* 1 *of* 1 *Print Date:* 04/15/2010 09:33

CONSTRUCTION DETAIL

Element	Cd.	Ch.	Description
Model	00		Vacant

CONSTRUCTION DETAIL (CONTINUED)

Element	Cd.	Ch.	Description

MIXED USE

Code	Description	Percentage
440V	IND LD DV MDL00	100

COST/MARKET VALUATION

Adj. Base Rate:	0.00
Replace Cost	0
AYB	
Dep Code	
Remodel Rating	
Year Remodeled	
Dep %	
Functional Obsinc	
External Obsinc	
Cost Trend Factor	
Status	
% Complete	
Overall % Cond	
Apprais Val	
Dep % Ovr	0
Dep Ovr Comment	
Misc Imp Ovr	0
Misc Imp Ovr Comment	
Cost to Cure Ovr	0
Cost to Cure Ovr Comment	

OB-OUTBUILDING & YARD ITEMS(L) / XF-BUILDING EXTRA FEATURES(B)

Code	Description	Sub	Sub Descript	L/B	Units	Unit Price	Yr	Gde	Dp Rt	Cnd	%Cnd	Apr Value
FN3	FENCE-6' CH/			L	900	9.90	2002		0		50	4,500
LT1	LIGHTS-IN W			L	4	760.00	2002		0		50	1,500

BUILDING SUB-AREA SUMMARY SECTION

Code	Description	Living Area	Gross Area	Eff. Area	Unit Cost	Undeprec. Value
	Ttl. Gross Liv/Lease Area:	0	0	0		

No Photo On Record

MAP SCALE 1" = 500'

250 0 500 1000 FEET

METE

NATIONAL FLOOD INSURANCE PROGRAM

PANEL 0467H

FIRM

FLOOD INSURANCE RATE MAP

NEW HAVEN COUNTY, CONNECTICUT

(ALL JURISDICTIONS)

PANEL 467 OF 635

(SEE MAP INDEX FOR FIRM PANEL LAYOUT)

CONTAINS:

COMMUNITY	NUMBER	PANEL	SUFFIX
BRANFORD, TOWN OF	090073	0467	H
NORTH BRANFORD, TOWN OF	090085	0467	H

Notice to User: The **Map Number** shown below should be used when placing map orders; the Community Number shown above should be used on insurance applications for the subject community.

MAP NUMBER
09009C0467H

EFFECTIVE DATE
DECEMBER 17, 2010

Federal Emergency Management Agency

This is an official copy of a portion of the above referenced flood map. It was extracted using F-MIT On-Line. This map does not reflect changes or amendments which may have been made subsequent to the date on the title block. For the latest product information about National Flood Insurance Program flood maps check the FEMA Flood Map Store at www.msc.fema.gov

Town of Branford

Geographic Information System (GIS)

Date Printed: 10/24/2011

CONNECTED TO SEWER

MAP DISCLAIMER - NOTICE OF LIABILITY

This map is for assessment purposes only. It is not for legal description or conveyances. All information is subject to verification by any user. The Town of Branford and its mapping contractors assume no legal responsibility for the information contained herein.

0 400 Feet

N W E S

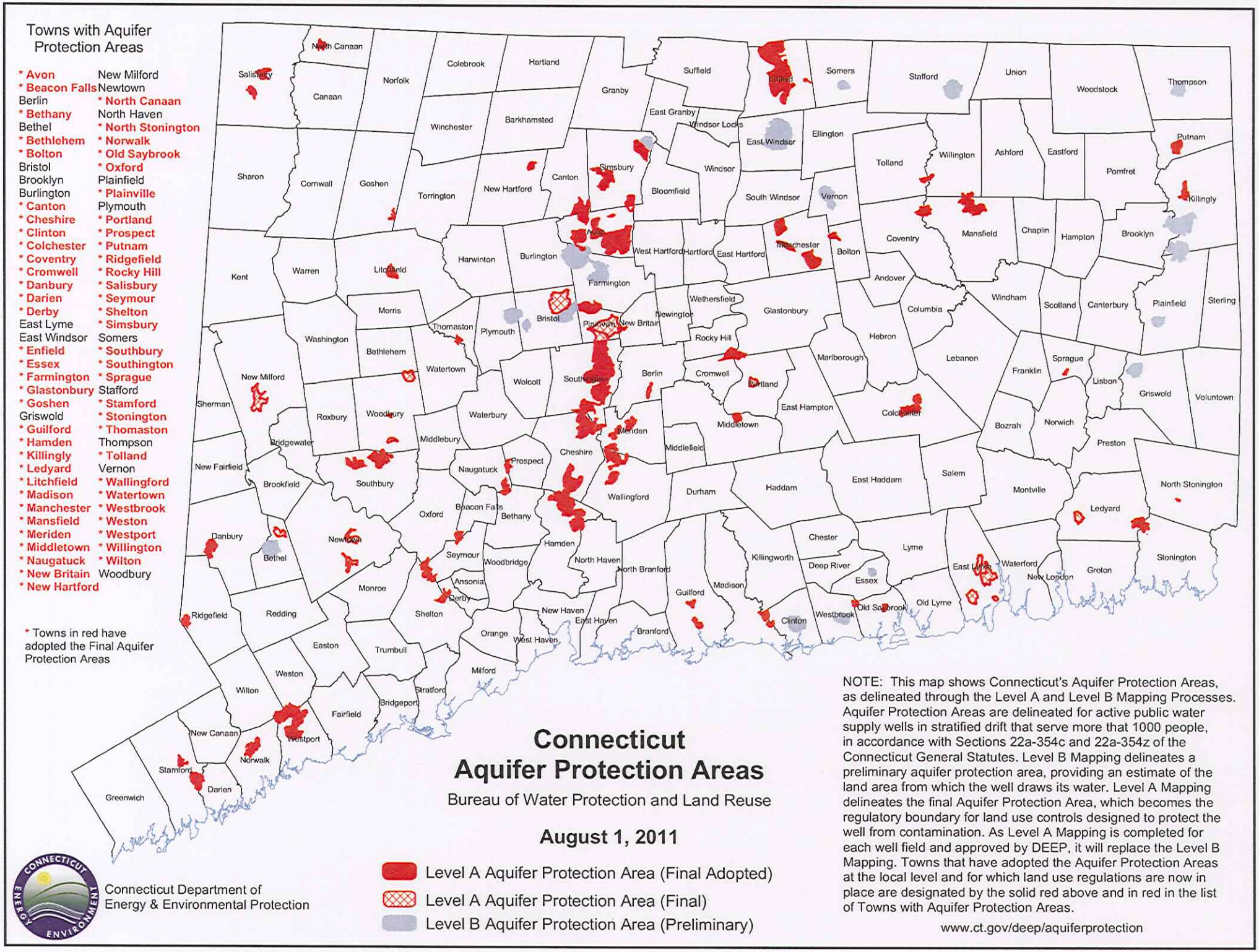
Towns with Aquifer Protection Areas
* Avon
* Beacon Falls
Berlin
* Bethany
Bethel
* Bethlehem
* Bolton
Bristol
Brooklyn
Burlington
* Canton
* Cheshire
* Clinton
* Colchester
* Coventry
* Cromwell
* Danbury
* Darien
* Derby
East Lyme
East Windsor
* Enfield
* Essex
* Farmington
* Glastonbury
* Goshen
Griswold
* Guilford
* Hamden
* Killingly
* Ledyard
* Litchfield
* Madison
* Manchester
* Mansfield
* Meriden
* Middletown
* Naugatuck
* New Britain
* New Hartford
New Milford
Newtown
* North Canaan
North Haven
* North Stonington
* Norwalk
* Old Saybrook
* Oxford
Plainfield
* Plainville
Plymouth
* Portland
* Prospect
* Putnam
* Ridgefield
* Rocky Hill
* Salisbury
* Seymour
* Shelton
* Simsbury
Somers
* Southbury
* Southington
* Sprague
Stafford
* Stamford
* Stonington
* Thomaston
Thompson
* Tolland
Vernon
* Wallingford
* Watertown
* Westbrook
* Weston
* Westport
* Willington
Woodbury
* Towns in red have adopted the Final Aquifer Protection Areas
Connecticut
Aquifer Protection Areas
Bureau of Water Protection and Land Reuse
August 1, 2011
Level A Aquifer Protection Area (Final Adopted)
Level A Aquifer Protection Area (Final)
Level B Aquifer Protection Area (Preliminary)
NOTE: This map shows Connecticut's Aquifer Protection Areas, as delineated through the Level A and Level B Mapping Processes. Aquifer Protection Areas are delineated for active public water supply wells in stratified drift that serve more that 1000 people, in accordance with Sections 22a-354c and 22a-354z of the Connecticut General Statutes. Level B Mapping delineates a preliminary aquifer protection area, providing an estimate of the land area from which the well draws its water. Level A Mapping delineates the final Aquifer Protection Area, which becomes the regulatory boundary for land use controls designed to protect the well from contamination. As Level A Mapping is completed for each well field and approved by DEEP, it will replace the Level B Mapping. Towns that have adopted the Aquifer Protection Areas at the local level and for which land use regulations are now in place are designated by the solid red above and in red in the list of Towns with Aquifer Protection Areas.
www.ct.gov/deep/aquiferprotection
Connecticut Department of Energy & Environmental Protection
CONNECTICUT ENERGY ENVIRONMENT

Natural Diversity Data Base Areas

BRANFORD, CT

July 2011

State and Federal Listed Species & Significant Natural Communities

Town Boundary

NOTE: This map shows general locations of State and Federal Listed Species and Significant Natural Communities. Information on listed species is collected and compiled by the Natural Diversity Data Base (NDDB) from a number of data sources . Exact locations of species have been buffered to produce the general locations. Exact locations of species and communities occur somewhere in the shaded areas, not necessarily in the center.

This map is intended for use as a preliminary screening tool for conducting a Natural Diversity Data Base Review Request. To use the map, locate the project boundaries and any additional affected areas. If the project is within a shaded area; or overlapping a lake, pond or wetland that has shading; or upstream or downstream (by less than 1/2 mile) from a shaded area, the project may have a potential conflict with a listed species. For more information, complete a Request for Natural Diversity Data Base State Listed Species Review form (DEP-APP-007), and submit it to the NDDB along with the required maps and information. More detailed instructions are provided with the request form on our website.

www.ct.gov/dep/nddbrequest

This file has PDF Layers. Look for the Layers tab on the left. Expand the layers and use the "eye" icons to change visibility.

QUESTIONS: Department of Energy and Environmental Protection (DEEP)
79 Elm St., Hartford CT 06106
Phone (860) 424-3011

Connecticut Department of Energy & Environmental Protection
Bureau of Natural Resources
Wildlife Division

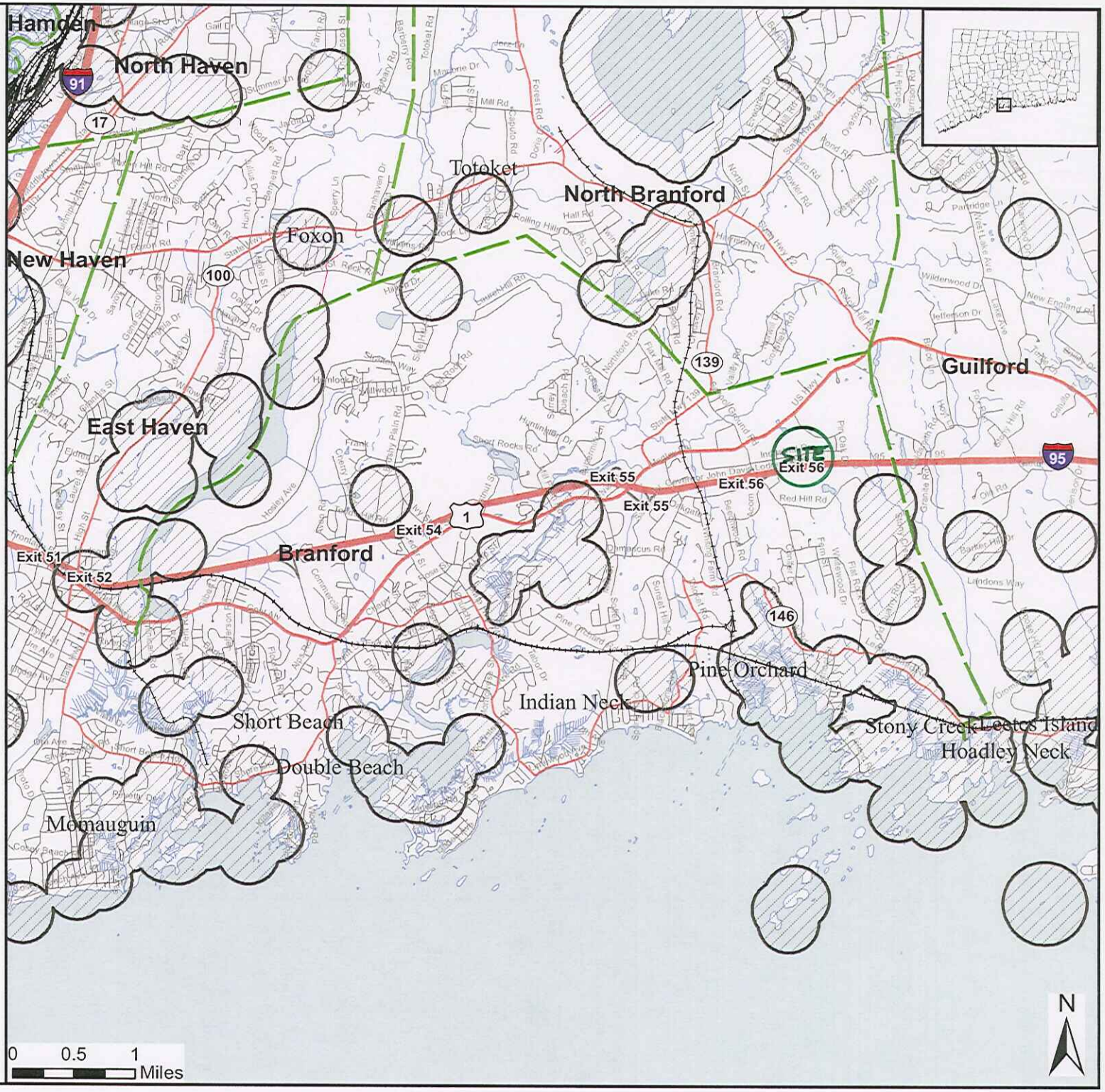

Town of Branford, CT
DPW Site Selection Study

PP-2: Tabor Drive

Frontage area at Tabor Drive

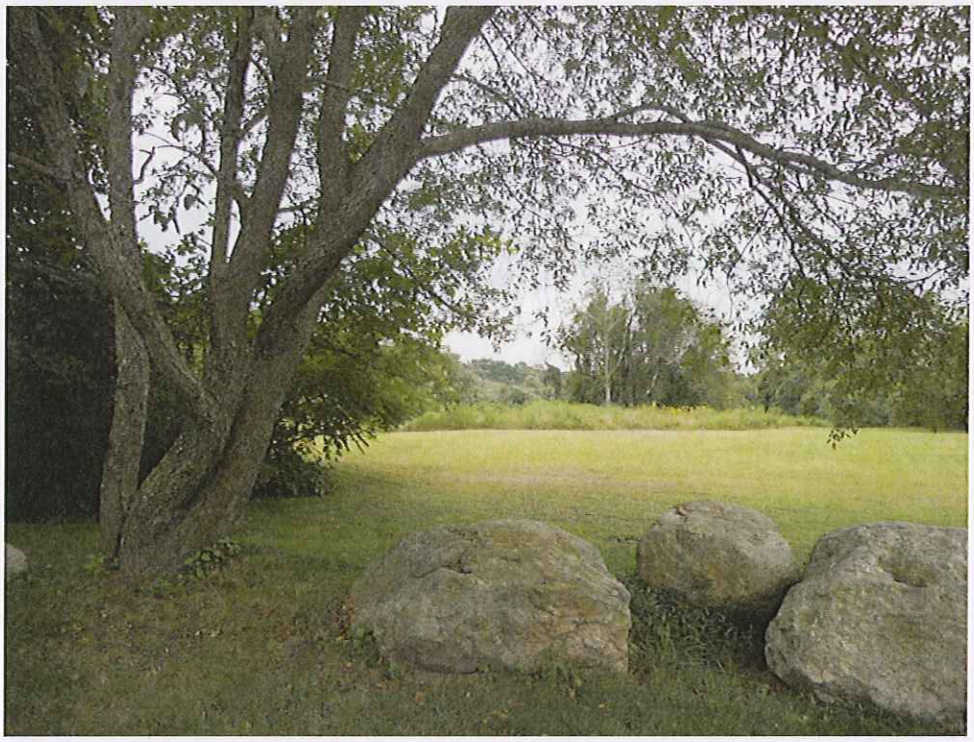

Tabor Drive site

Town of Branford, CT
DPW Site Selection Study
PP-2: Tabor Drive
October 2011

Tabor Drive site

Tabor Drive site

Town of Branford, CT
DPW Site Selection Study
PP-2: Tabor Drive
October 2011

Town of Branford

Geographic Information System (GIS)

Date Printed: 9/13/2011

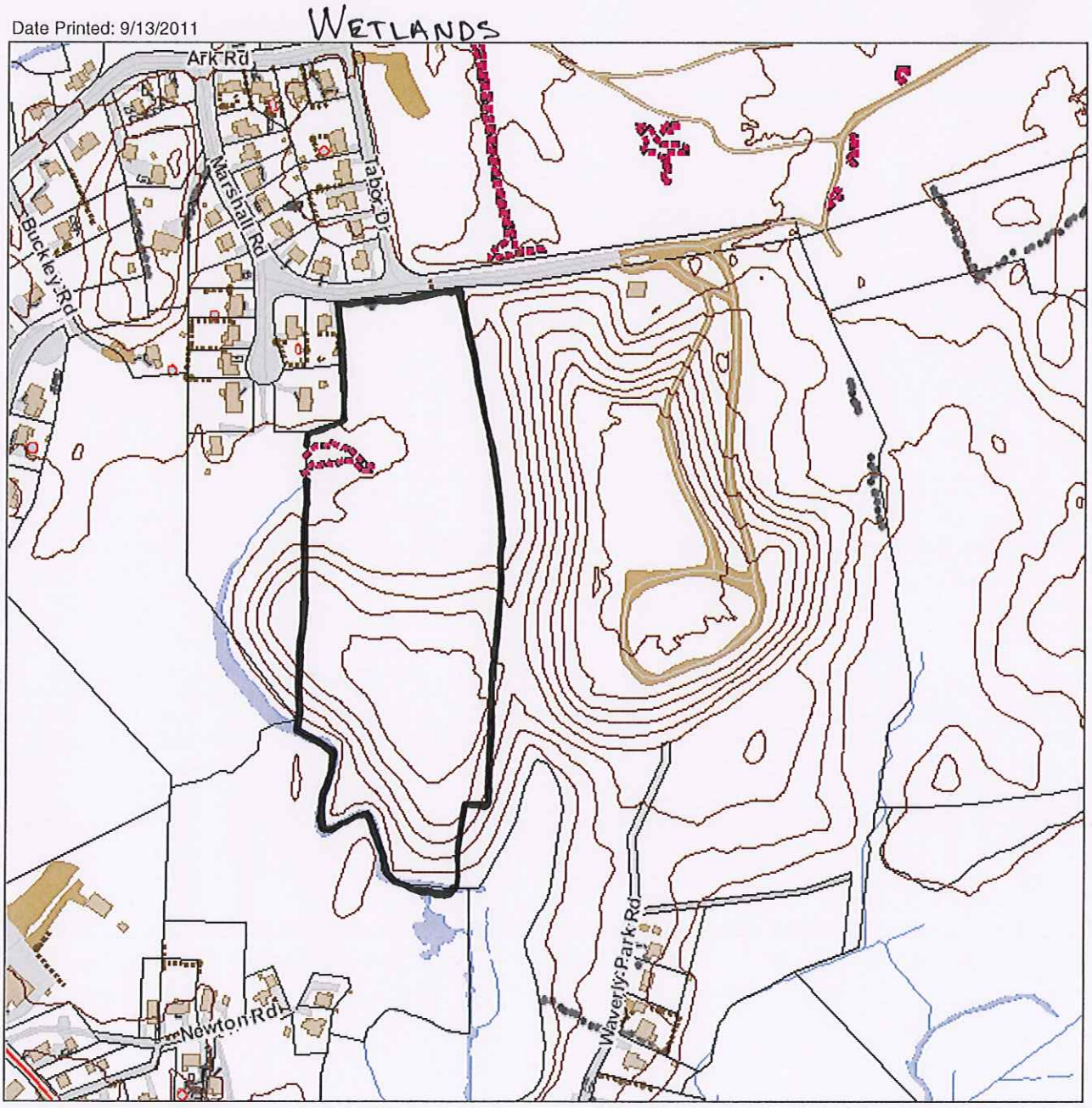

MAP DISCLAIMER - NOTICE OF LIABILITY

This map is for assessment purposes only. It is not for legal description or conveyances. All information is subject to verification by any user. The Town of Branford and its mapping contractors assume no legal responsibility for the information contained herein.

0 400 Feet

N W E S

Town of Branford

Geographic Information System (GIS)

Date Printed: 9/13/2011

ZONING

MAP DISCLAIMER - NOTICE OF LIABILITY

This map is for assessment purposes only. It is not for legal description or conveyances. All information is subject to verification by any user. The Town of Branford and its mapping contractors assume no legal responsibility for the information contained herein.

0 1,000 Feet

N W E S

Legend

- Railroad Tracks
- ROW / Easement Boundary
- Water Feature (Swamp, Pond, River, Lake)
- Mean High Water Level
- Property Lines as of December 2007
- Block Boundary
- Town Boundary
- Measured Dimensions
- Source Map Dimensions
- Building Structure
- 5 — Block Number
- 10 — Lot Number
- 5.0 AC — Acreage

ASSESSMENT MAP OF THE TOWN OF BRANFORD, CONNECTICUT 2007

DATES OF AERIAL PHOTOGRAPHY: MARCH 29 AND APRIL 6, 1999

MAP PRINTED JANUARY 2008

SCALE 1" = 200'

100 50 0 100 200 300 400 500 Feet

This map is for informational purposes only. All information is subject to verification by any user. The Town of Branford and its mapping contractors assume no legal responsibility for the information contained hereon.

Map: F09

F08	F09	G09
E09		G09
E10	F10	G10

Property Location: TABOR DR | MAP ID: F09/000 006/ 00012/ / | Bldg Name: | State Use: 7100

Vision ID: 10007 | Account #009805 | Bldg #: 1 of 1 | Sec #: 1 of 1 | Card 1 of 1 | Print Date: 04/15/2010 18:51

CURRENT OWNER	TOPO.	UTILITIES	STRT./ROAD	LOCATION
ZUWALICK HENRY W	1 Level	2 Public Water	1 Paved	2 Suburban
36 ZUWALICK LA		3 Public Sewer		
BRANFORD, CT 06405				
Additional Owners:				

SUPPLEMENTAL DATA

Other ID:	F09/000/006/00012/	HLDG TK	
CONDO BLDG		SEPTIC	
CONDO UNIT		SEWER	
CONDO FLOOI		DISTRICT	
		CENSUS TR	1844

GIS ID: F09/000/006/00012 | ASSOC PID#

CURRENT ASSESSMENT

Description	Code	Appraised Value	Assessed Value
FARM LAND	6-1	218,400	5,100
		Total	218,400	5,100

6014
BRANFORD, CT

VISION

RECORD OF OWNERSHIP	BK-VOL/PAGE	SALE DATE	q/u	v/i	SALE PRICE	V.C.
ZUWALICK HENRY W	0235/0248	04/19/1971	U		0	

PREVIOUS ASSESSMENTS (HISTORY)

Yr.	Code	Assessed Value	Yr.	Code	Assessed Value	Yr.	Code	Assessed Value
2009	6-1	5,100	2008	6-1	5,100	2004	6-1	5,100
	Total:	5,100		Total:	5,100		Total:	5,100

EXEMPTIONS

Year	Type	Description	Amount
		Total:	

OTHER ASSESSMENTS

Code	Description	Number	Amount	Comm. Int.

This signature acknowledges a visit by a Data Collector or Assessor

ASSESSING NEIGHBORHOOD

NBHD/ SUB	NBHD NAME	STREET INDEX NAME	TRACING	BATCH
0078/A				

NOTES

14.50 AC FARM
12.00 AC TILLABLE C
2.50 AC WASTELAND

APPRAISED VALUE SUMMARY

Appraised Bldg. Value (Card)	0
Appraised XF (B) Value (Bldg)	0
Appraised OB (L) Value (Bldg)	0
Appraised Land Value (Bldg)	0
Special Land Value	218,400
Total Appraised Parcel Value	218,400
Valuation Method:	C
Adjustment:	0
Net Total Appraised Parcel Value	218,400

BUILDING PERMIT RECORD

Permit ID	Issue Date	Type	Description	Amount	Insp. Date	% Comp.	Date Comp.	Comments

VISIT/ CHANGE HISTORY

Date	Type	IS	ID	Cd.	Purpose/Result
10/27/2009			YM	11	Field Review
3/5/2009			RV	00	Measur+Listed
10/14/2004			DM	11	Field Review
1/17/2003			SF	41	Change
10/9/2002			AH	11	Field Review

LAND LINE VALUATION SECTION

B #	Use Code	Use Description	Zone	D	Frontage	Depth	Units		Unit Price	I. Factor	S.A.	Acre Disc	C. Factor	ST. Idx	Adj.	Notes- Adj	Special Pricing	Adj. Unit Price	Land Value
1	7100	FARM	R3				0.34	AC	109,600.00	2.62	5	1.0000	1.00	0078	1.45		490:500		141,400
1	7100	FARM	R3				14.16	AC	7,500.00	1.00	0	1.0000	0.50	0078	1.45	TOPO	490:500		77,000

Total Card Land Units: 14.50 AC | Parcel Total Land Area: 14.5 AC | Total Land Value: 218,400

Property Location: TABOR DR *MAP ID:* F09/000 006/ 00012/ / *Bldg Name:* *State Use:* 7100

Vision ID: 10007 *Account #* 009805 *Bldg #:* 1 of 1 *Sec #:* 1 *of* 1 *Card* 1 *of* 1 *Print Date:* 04/15/2010 18:51

CONSTRUCTION DETAIL

Element	Cd.	Ch.	Description
Model	00		Vacant

CONSTRUCTION DETAIL (CONTINUED)

Element	Cd.	Ch.	Description

MIXED USE

Code	Description	Percentage
7100	FARM	100

COST/MARKET VALUATION

Adj. Base Rate:	0.00
Replace Cost	0
AYB	
Dep Code	
Remodel Rating	
Year Remodeled	
Dep %	
Functional Obsinc	
External Obsinc	
Cost Trend Factor	
Status	
% Complete	
Overall % Cond	
Apprais Val	
Dep % Ovr	0
Dep Ovr Comment	
Misc Imp Ovr	0
Misc Imp Ovr Comment	
Cost to Cure Ovr	0
Cost to Cure Ovr Comment	

OB-OUTBUILDING & YARD ITEMS(L) / XF-BUILDING EXTRA FEATURES(B)

Code	Description	Sub	Sub Descript	L/B	Units	Unit Price	Yr	Gde	Dp Rt	Cnd	%Cnd	Apr Value

BUILDING SUB-AREA SUMMARY SECTION

Code	Description	Living Area	Gross Area	Eff. Area	Unit Cost	Undeprec. Value
	Ttl. Gross Liv/Lease Area:	0	0	0		

No Photo On Record

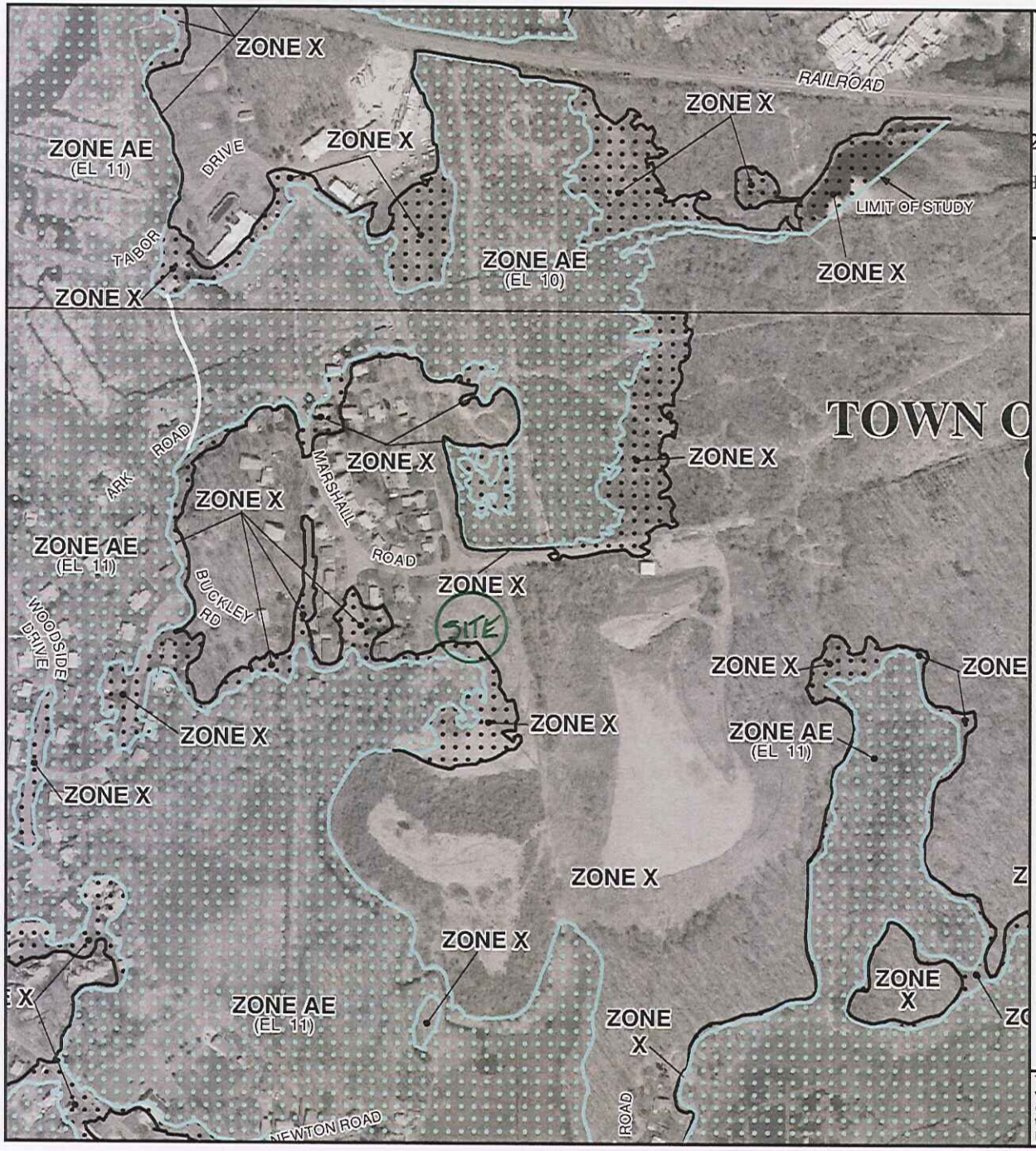

MAP SCALE 1" = 500'

250 0 500 1000 FEET

METER

NFIP

NATIONAL FLOOD INSURANCE PROGRAM

PANEL 0468H

FIRM

FLOOD INSURANCE RATE MAP

NEW HAVEN COUNTY, CONNECTICUT

(ALL JURISDICTIONS)

PANEL 468 OF 635

(SEE MAP INDEX FOR FIRM PANEL LAYOUT)

CONTAINS:

COMMUNITY	NUMBER	PANEL	SUFFIX
BRANFORD, TOWN OF	090073	0468	H

Notice to User: The **Map Number** shown below should be used when placing map orders; the **Community Number** shown above should be used on insurance applications for the subject community.

MAP NUMBER
09009C0468H

EFFECTIVE DATE
DECEMBER 17, 2010

Federal Emergency Management Agency

This is an official copy of a portion of the above referenced flood map. It was extracted using F-MIT On-Line. This map does not reflect changes or amendments which may have been made subsequent to the date on the title block. For the latest product information about National Flood Insurance Program flood maps check the FEMA Flood Map Store at www.msc.fema.gov

Town of Branford

Geographic Information System (GIS)

Date Printed: 10/24/2011

NOT CONNECTED TO SEWER

MAP DISCLAIMER - NOTICE OF LIABILITY

This map is for assessment purposes only. It is not for legal description or conveyances. All information is subject to verification by any user. The Town of Branford and its mapping contractors assume no legal responsibility for the information contained herein.

0 400 Feet

N W E S

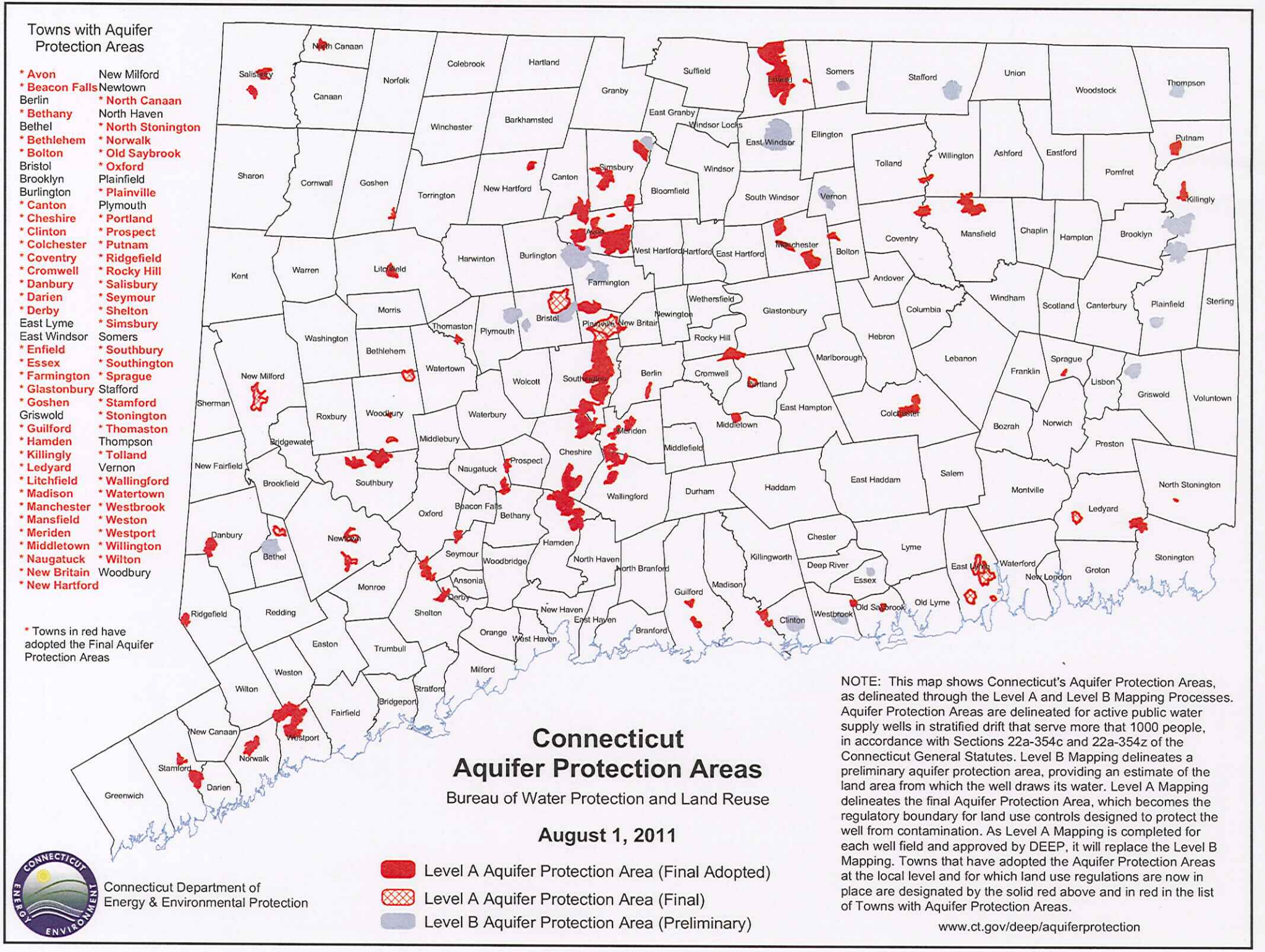
Towns with Aquifer Protection Areas
* Avon
* Beacon Falls
Berlin
* Bethany
Bethel
* Bethlehem
* Bolton
Bristol
Brooklyn
Burlington
* Canton
* Cheshire
* Clinton
* Colchester
* Coventry
* Cromwell
* Danbury
* Darien
* Derby
East Lyme
East Windsor
* Enfield
* Essex
* Farmington
* Glastonbury
* Goshen
Griswold
* Guilford
* Hamden
* Killingly
* Ledyard
* Litchfield
* Madison
* Manchester
* Mansfield
* Meriden
* Middletown
* Naugatuck
* New Britain
* New Hartford
New Milford
Newtown
* North Canaan
North Haven
* North Stonington
* Norwalk
* Old Saybrook
* Oxford
Plainfield
* Plainville
Plymouth
* Portland
* Prospect
* Putnam
* Ridgefield
* Rocky Hill
* Salisbury
* Seymour
* Shelton
* Simsbury
Somers
* Southbury
* Southington
* Sprague
* Stamford
* Stonington
* Thomaston
Thompson
* Tolland
Vernon
* Wallingford
* Watertown
* Westbrook
* Weston
* Westport
* Willington
Wilton
Woodbury
* Towns in red have adopted the Final Aquifer Protection Areas
Connecticut
Aquifer Protection Areas
Bureau of Water Protection and Land Reuse
August 1, 2011
Level A Aquifer Protection Area (Final Adopted)
Level A Aquifer Protection Area (Final)
Level B Aquifer Protection Area (Preliminary)
Connecticut Department of Energy & Environmental Protection
NOTE: This map shows Connecticut's Aquifer Protection Areas, as delineated through the Level A and Level B Mapping Processes. Aquifer Protection Areas are delineated for active public water supply wells in stratified drift that serve more that 1000 people, in accordance with Sections 22a-354c and 22a-354z of the Connecticut General Statutes. Level B Mapping delineates a preliminary aquifer protection area, providing an estimate of the land area from which the well draws its water. Level A Mapping delineates the final Aquifer Protection Area, which becomes the regulatory boundary for land use controls designed to protect the well from contamination. As Level A Mapping is completed for each well field and approved by DEEP, it will replace the Level B Mapping. Towns that have adopted the Aquifer Protection Areas at the local level and for which land use regulations are now in place are designated by the solid red above and in red in the list of Towns with Aquifer Protection Areas.
www.ct.gov/deep/aquiferprotection

Natural Diversity Data Base Areas

BRANFORD, CT

July 2011

State and Federal Listed Species & Significant Natural Communities

Town Boundary

NOTE: This map shows general locations of State and Federal Listed Species and Significant Natural Communities. Information on listed species is collected and compiled by the Natural Diversity Data Base (NDDB) from a number of data sources . Exact locations of species have been buffered to produce the general locations. Exact locations of species and communities occur somewhere in the shaded areas, not necessarily in the center.

This map is intended for use as a preliminary screening tool for conducting a Natural Diversity Data Base Review Request. To use the map, locate the project boundaries and any additional affected areas. If the project is within a shaded area; or overlapping a lake, pond or wetland that has shading; or upstream or downstream (by less than 1/2 mile) from a shaded area, the project may have a potential conflict with a listed species. For more information, complete a Request for Natural Diversity Data Base State Listed Species Review form (DEP-APP-007), and submit it to the NDDB along with the required maps and information. More detailed instructions are provided with the request form on our website.

www.ct.gov/dep/nddbrequest

This file has PDF Layers. Look for the Layers tab on the left. Expand the layers and use the "eye" icons to change visibility.

QUESTIONS: Department of Energy and Environmental Protection (DEEP)
79 Elm St., Hartford CT 06106
Phone (860) 424-3011

Connecticut Department of Energy & Environmental Protection
Bureau of Natural Resources
Wildlife Division

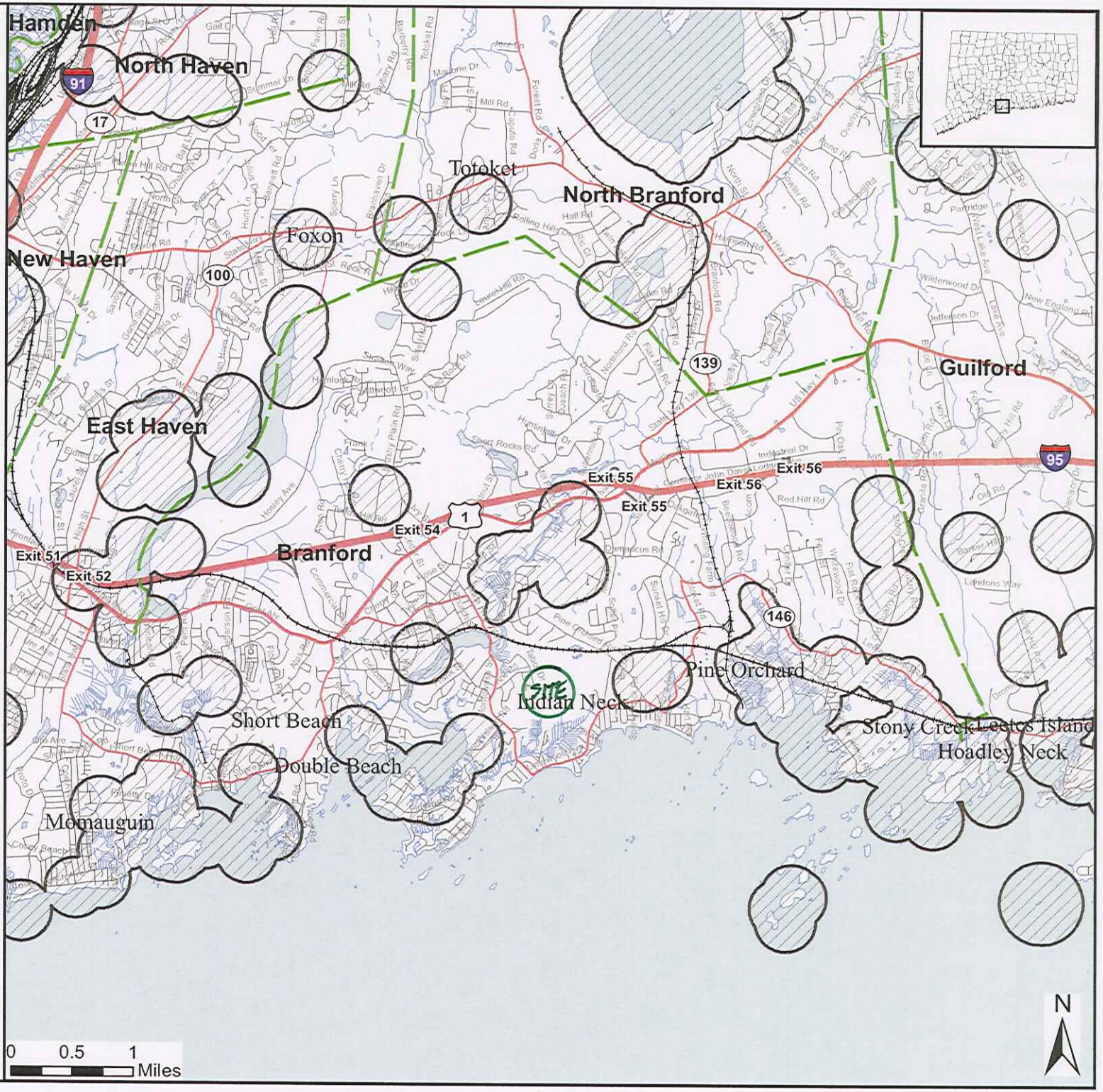

Town of Branford, CT
DPW Site Selection Study

PP-3: 114 School Ground Road

114 School Ground Road site

Building at 114 School Ground Road site

Town of Branford, CT
DPW Site Selection Study
PP-3: 114 School Ground Road
October 2011

Parking area near river at 114 School Ground Road site

On bridge looking towards 114 School Ground Road site

Town of Branford, CT
DPW Site Selection Study
PP-3: 114 School Ground Road
October 2011

Town of Branford

Geographic Information System (GIS)

Date Printed: 9/13/2011

WETLANDS

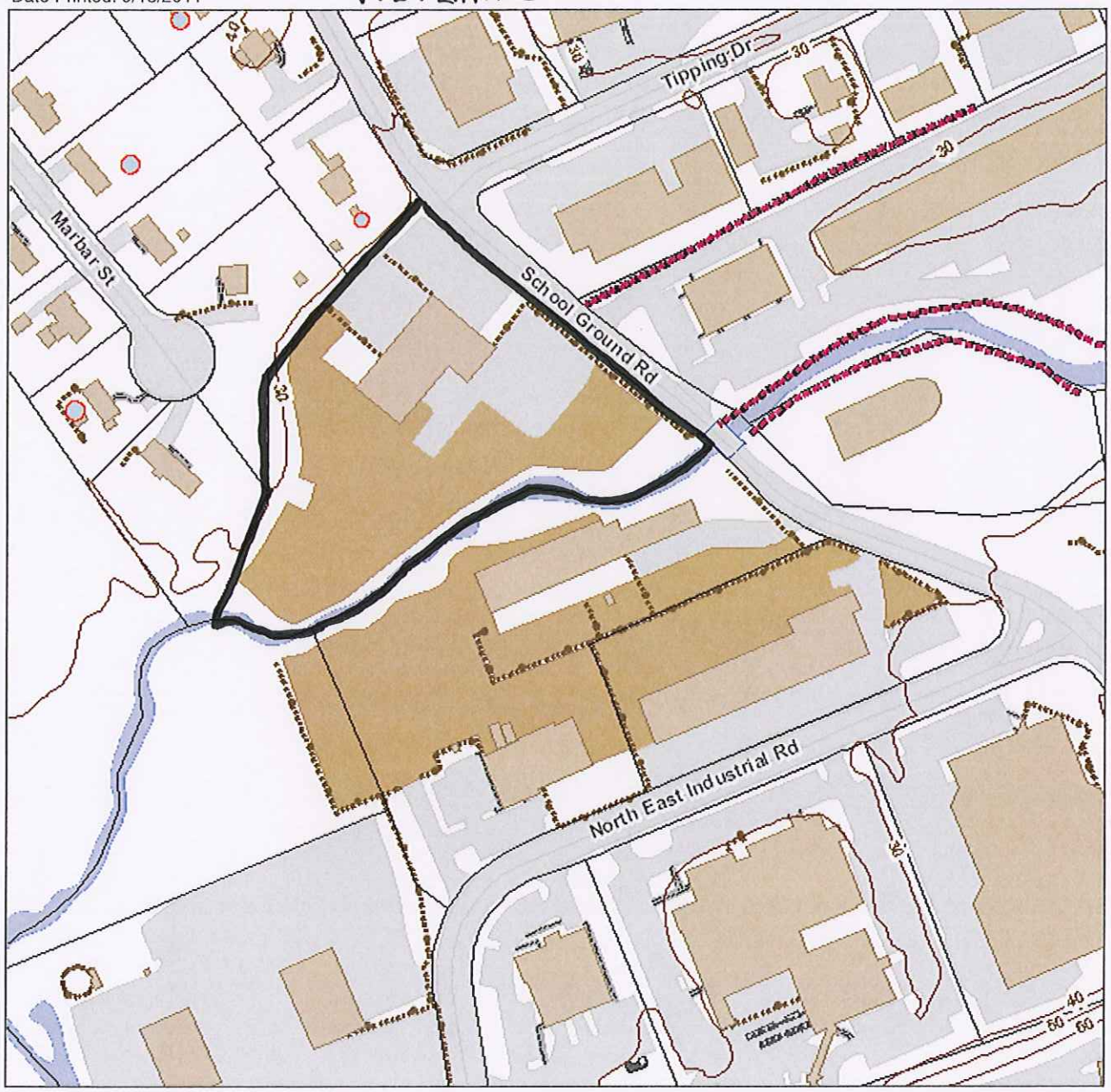

MAP DISCLAIMER - NOTICE OF LIABILITY

This map is for assessment purposes only. It is not for legal description or conveyances. All information is subject to verification by any user. The Town of Branford and its mapping contractors assume no legal responsibility for the information contained herein.

0 200 Feet

N W E S

Town of Branford

Geographic Information System (GIS)

Date Printed: 9/13/2011

ZONING

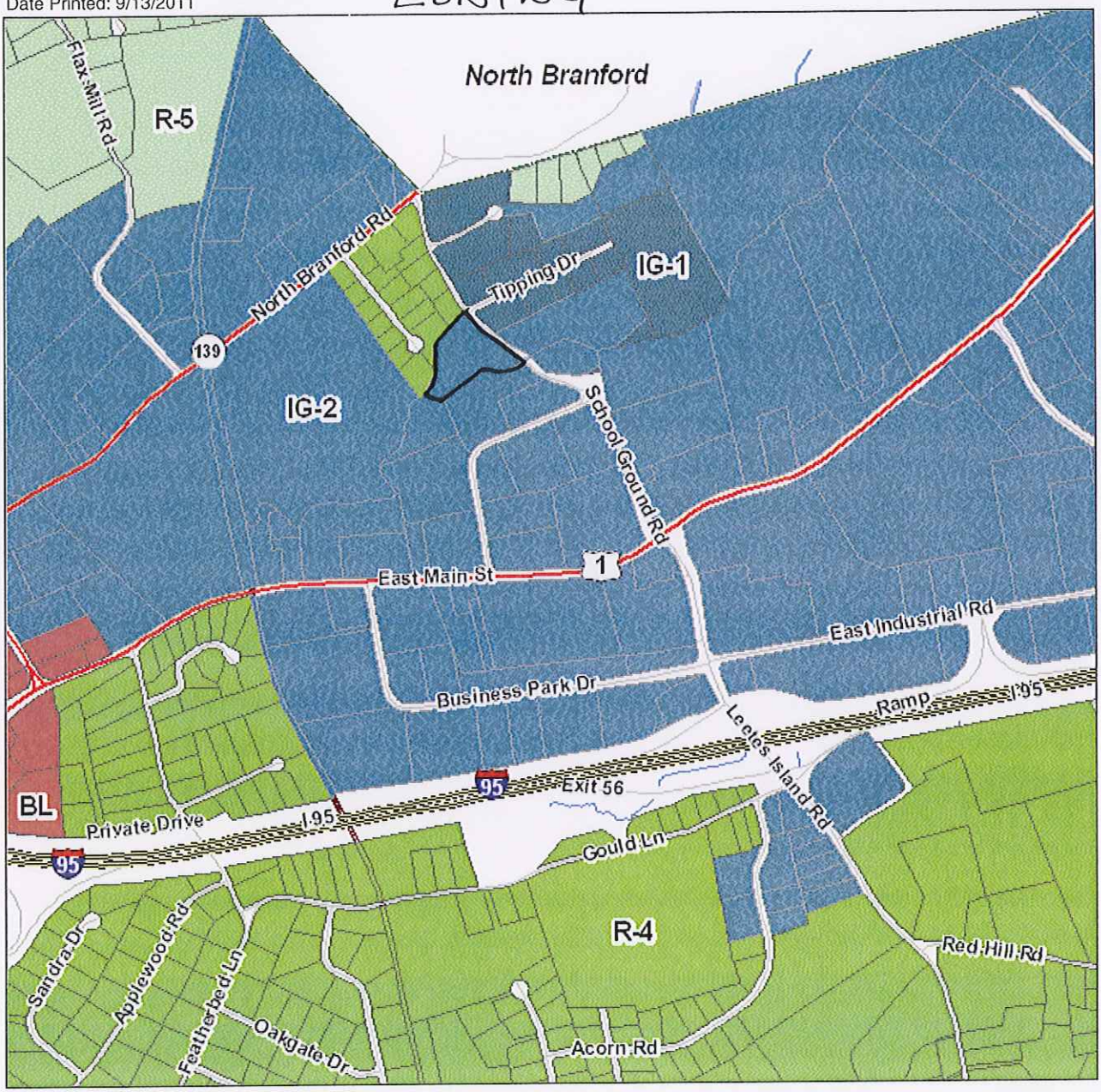

MAP DISCLAIMER - NOTICE OF LIABILITY

This map is for assessment purposes only. It is not for legal description or conveyances. All information is subject to verification by any user. The Town of Branford and its mapping contractors assume no legal responsibility for the information contained herein.

0 1,000 Feet

N W E S

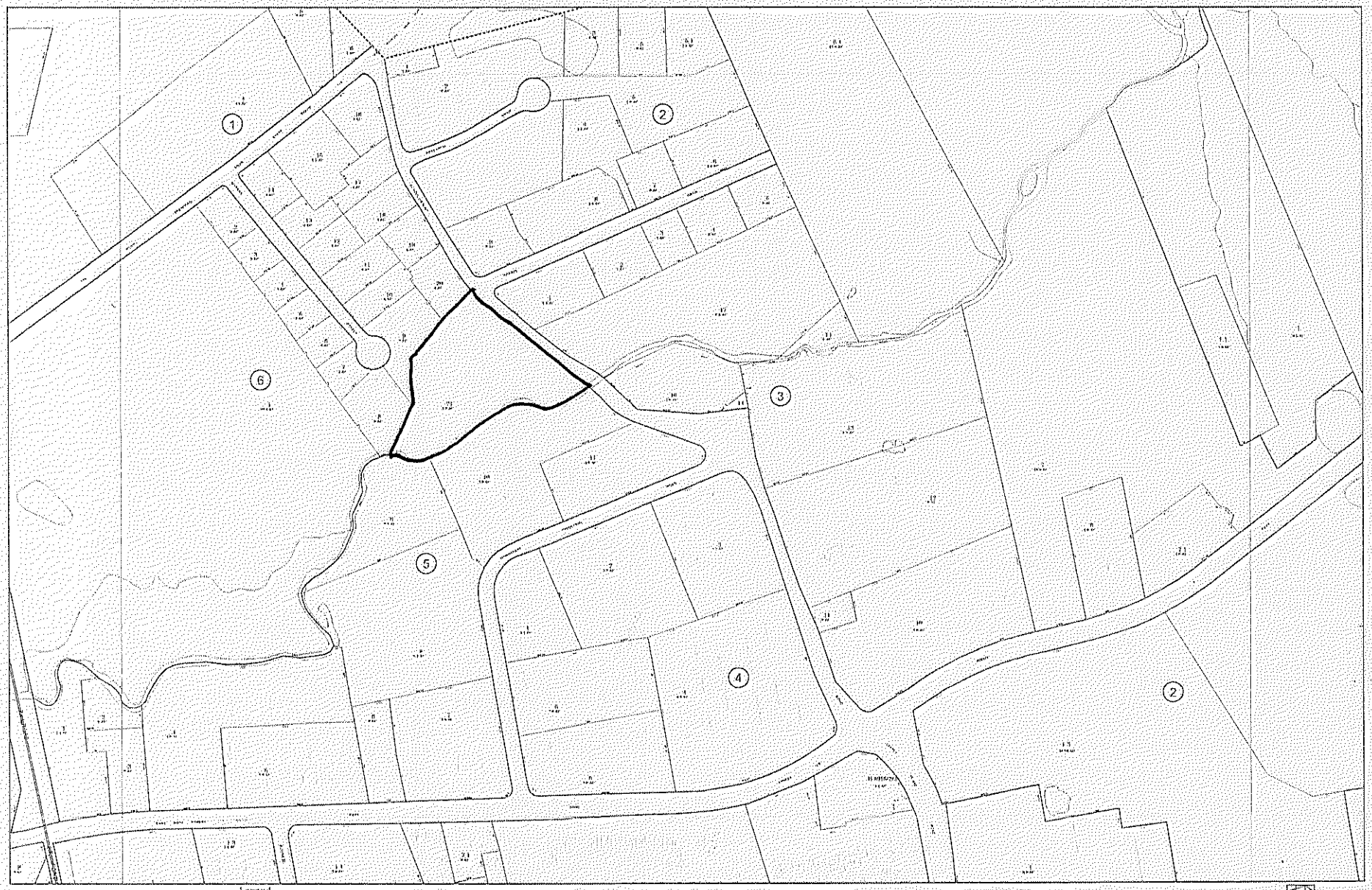

Legend

- Railroad Tracks
- Building / Pavement Boundary
- Water Features (Swamp, Pond, River, Lake)
- Mean High Water Level
- Property Lines as of December 2007
- Block Boundary
- Town Boundary
- Monument Demarcation
- Source Map Dimensions
- Building Structure
- 5 Block Number
- 10 Lot Number
- 0.00 AC Acreage

ASSESSMENT MAP OF
THE TOWN OF BRANFORD, CONNECTICUT 2007

DATES OF AERIAL PHOTOGRAPHY: MARCH 29 AND APRIL 6, 1999

MAP PRINTED JANUARY 2008

SCALE 1" = 200'

100 50 0 100 200 300 400 500 Feet

This map is for informational purposes only. All information is subject to verification by any user. The Town of Branford and its mapping contractors assume no legal responsibility for the information contained herein.

Map: 104

003	103	203
004		204
005	105	205

Property Location: 114 SCHOOL GROUND RD | MAP ID: H04/000 006/ 00021/ / | Bldg Name: | State Use: 3321

Vision ID: 1151 | Account # 000613 | Bldg #: 1 of 1 | Sec #: 1 of 1 | Card 1 of 1 | Print Date: 04/15/2010 09:26

CURRENT OWNER	TOPO.	UTILITIES	STRT./ROAD	LOCATION
JARVIS CREEK TRUCK SALES +	1 Level	2 Public Water	1 Paved	5 Industrial
SERVICES LLC		3 Public Sewer		
114 SCHOOL GROUND RD		4 Gas		
BRANFORD, CT 06405				
Additional Owners:				

SUPPLEMENTAL DATA

Other ID:	H04/000/006/00021/	HLDG TK	
CONDO BLDG		SEPTIC	
CONDO UNIT		SEWER	
CONDO FLOOI		DISTRICT	
		CENSUS TR 1847	
GIS ID: H04/000/006/00021		ASSOC PID#	

CURRENT ASSESSMENT

Description	Code	Appraised Value	Assessed Value
COM LAND	2-1	432,740	302,940
COM BLDG	2-2	470,470	329,340
COM OUTBL	2-5	38,720	27,170
	Total	941,930	659,450

6014
BRANFORD, CT

VISION

RECORD OF OWNERSHIP	BK-VOL/PAGE	SALE DATE	q/u	v/i	SALE PRICE	V.C.
JARVIS CREEK TRUCK SALES +	1021/0335	09/30/2008	U	I		22
NEWTON + BEAUTON LLC	0687/0616	10/29/1999				
BEAUTON GERALD JR +	0233/0500					

PREVIOUS ASSESSMENTS (HISTORY)

Yr.	Code	Assessed Value	Yr.	Code	Assessed Value	Yr.	Code	Assessed Value
2009	2-1	302,940	2008	2-1	275,400	2004	2-1	275,400
2009	2-2	329,340	2008	2-2	312,800	2004	2-2	320,200
2009	2-5	27,170	2008	2-5	22,500	2004	2-5	22,500
	Total:	659,450		Total:	610,700		Total:	618,100

EXEMPTIONS

Year	Type	Description	Amount
		Total:	

OTHER ASSESSMENTS

Code	Description	Number	Amount	Comm. Int.

This signature acknowledges a visit by a Data Collector or Assessor

ASSESSING NEIGHBORHOOD

NBHD/ SUB	NBHD NAME	STREET INDEX NAME	TRACING	BATCH
400/A				

NOTES

FREIGHTLINER TRUCK SALES SERVICE
ECO=MKT (2009 I&E PENALTY)
2ND FLR OFF VAC-FIN CLNG
WALL AC CARPET
SHOP-TRUCK BODY SHOP
32X50 PRE-ENG GARAGE
ALSO GABLE/ASPH ROOF
FREIGHTLINER OCCUPIES ABOUT 6000 SF
BUT WILL BE MOVING OUT BY 6/09; 30X50
BAS-CUSTOM CAR REPAIR, 1 BOAT RPR SVC
BAY & SFB LEASED AS WORKSHOP

APPRAISED VALUE SUMMARY

Appraised Bldg. Value (Card)	416,600
Appraised XF (B) Value (Bldg)	11,100
Appraised OB (L) Value (Bldg)	35,200
Appraised Land Value (Bldg)	393,400
Special Land Value	0
Total Appraised Parcel Value	941,930
Valuation Method:	C
Adjustment:	0
Net Total Appraised Parcel Value	941,930

BUILDING PERMIT RECORD

Permit ID	Issue Date	Type	Description	Amount	Insp. Date	% Comp.	Date Comp.	Comments

VISIT/ CHANGE HISTORY

Date	Type	IS	ID	Cd.	Purpose/Result
10/20/2009			JWS	16	Reval Review
5/7/2009			GM	00	Measur+Listed
1/25/2005			DT	41	Change
10/14/2004			BD	16	Reval Review
10/11/2002			BD	11	Field Review

LAND LINE VALUATION SECTION

B #	Use Code	Use Description	Zone	D	Frontage	Depth	Units		Unit Price	I. Factor	S.A.	Acre Disc	C. Factor	ST. Idx	Adj.	Notes- Adj	Special Pricing	Adj. Unit Price	Land Value
1	3321	AUTO REPR MDL96	IG-2				1.38	AC	229,200.00	0.81	I	1.0000	1.00	400	1.00				255,000
1	3320	AUTO REPR MDL95					2.46	AC	75,000.00	1.00	0	1.0000	0.75	400	1.00	WET			138,400
Total Card Land Units:							3.84	AC	Parcel Total Land Area:	3.84 AC								Total Land Value:	393,400

Property Location: 114 SCHOOL GROUND RD | MAP ID: H04/000 006/ 00021/ / | Bldg Name: | State Use: 3321

Vision ID: 1151 | Account # 000613 | Bldg #: 1 of 1 | Sec #: 1 of 1 | Card 1 of 1 | Print Date: 04/15/2010 09:26

CONSTRUCTION DETAIL

Element	Cd.	Ch.	Description
Style	25		Service Shop
Model	96		Ind/Comm
Grade	03		C
Stories	2		
Occupancy	4		
Exterior Wall 1	15		Concr/Cinder
Exterior Wall 2	26		Aluminum Sidng
Roof Structure	01		Flat
Roof Cover	04		T&G/Rubber
Interior Wall 1	01		Minim/Masonry
Interior Wall 2	05		Drywall
Interior Floor 1	03		Concr-Finished
Interior Floor 2			
Heating Fuel	03		Gas
Heating Type	03		Hot Air-no Duc
AC Type	01		None
Bldg Use	3321		AUTO REPR MDL96
Total Rooms			
Total Bedrms	00		
Total Baths	0		
Heat/AC	02		HEAT/AC SPLIT
Frame Type	03		MASONRY
Baths/Plumbing	02		AVERAGE
Ceiling/Wall	02		CEILING ONLY
Rooms/Prtns	02		AVERAGE
Wall Height	18		
% Comn Wall	0		

CONSTRUCTION DETAIL (CONTINUED)

Element	Cd.	Ch.	Description

MIXED USE

Code	Description	Percentage
3321	AUTO REPR MDL96	100

COST/MARKET VALUATION

Adj. Base Rate:	44.00
Replace Cost	671,924
AYB	1980
Dep Code	A
Remodel Rating	
Year Remodeled	
Dep %	23
Functional Obsinc	
External Obsinc	15
Cost Trend Factor	
Status	
% Complete	
Overall % Cond	62
Apprais Val	416,600
Dep % Ovr	0
Dep Ovr Comment	
Misc Imp Ovr	0
Misc Imp Ovr Comment	
Cost to Cure Ovr	0
Cost to Cure Ovr Comment	

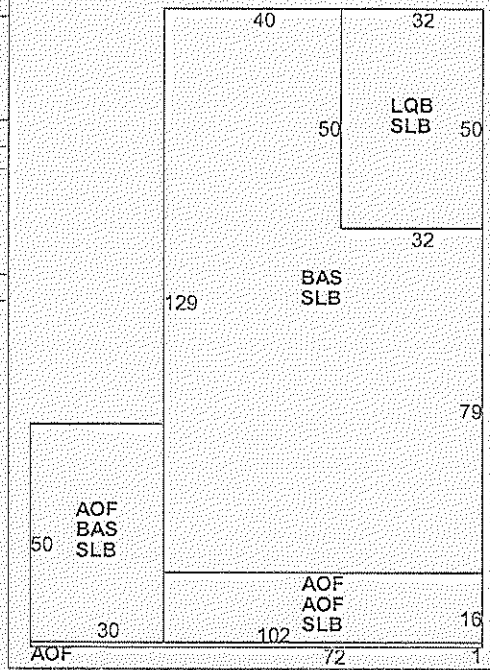

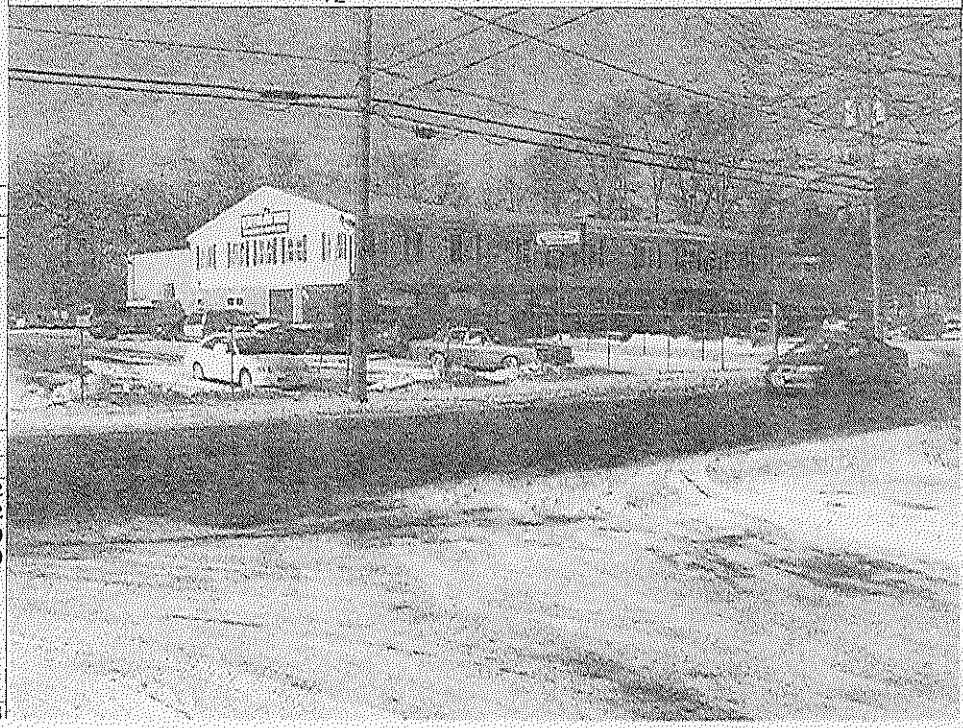

OB-OUTBUILDING & YARD ITEMS(L) / XF-BUILDING EXTRA FEATURES(B)

Code	Description	Sub	Sub Descript	L/B	Units	Unit Price	Yr	Gde	Dp Rt	Cnd	%Cnd	Apr Value
PAV1	PAVING-ASPI			L	45,000	1.65	2002		0		40	29,700
FN5	FENCE-10'CH			L	650	14.00	2002		0		60	5,500
A/C	AIR CONDITI			B	2,700	2.20	1986		1		100	3,700
MEZ1	MEZZANINE-			B	1,200	10.00	1986		1		100	7,400

BUILDING SUB-AREA SUMMARY SECTION

Code	Description	Living Area	Gross Area	Eff. Area	Unit Cost	Undeprec. Value
AOF	Office	3,906	3,906	4,883	55.01	214,852
BAS	First Floor	9,188	9,188	9,188	44.00	404,272
LQB	Low Qual Bas	1,600	1,600	1,200	33.00	52,800
SLB	Slab	0	11,940	0	0.00	0
	Tfl. Gross Liv/Lease Area:	14,694	26,634	15,271		671,924

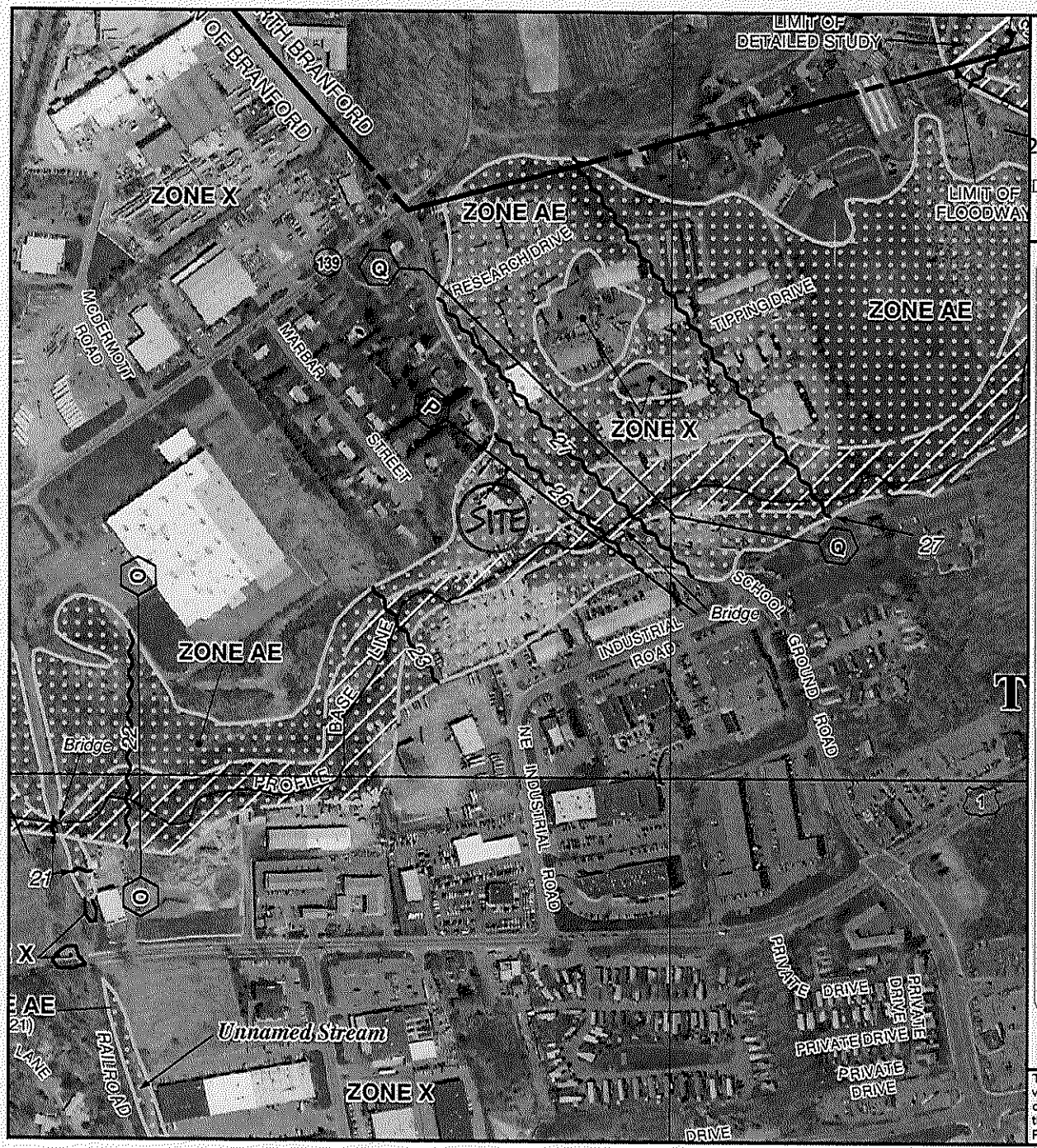

MAP SCALE 1" = 500'

250 0 500 1000 FEET

METE

NFIP

NATIONAL FLOOD INSURANCE PROGRAM

PANEL 0467H

FIRM

FLOOD INSURANCE RATE MAP

NEW HAVEN COUNTY, CONNECTICUT

(ALL JURISDICTIONS)

PANEL 467 OF 635

(SEE MAP INDEX FOR FIRM PANEL LAYOUT)

CONTAINS:

COMMUNITY	NUMBER	PANEL	SUFFIX
BRANFORD, TOWN OF	090073	0467	H
NORTH BRANFORD, TOWN OF	090085	0467	H

Notice to User: The **Map Number** shown below should be used when placing map orders; the **Community Number** shown above should be used on insurance applications for the subject community.

MAP NUMBER
09009C0467H

EFFECTIVE DATE
DECEMBER 17, 2010

Federal Emergency Management Agency

This is an official copy of a portion of the above referenced flood map. It was extracted using F-MIT On-Line. This map does not reflect changes or amendments which may have been made subsequent to the date on the title block. For the latest product information about National Flood Insurance Program flood maps check the FEMA Flood Map Store at www.msc.fema.gov

Town of Branford

Geographic Information System (GIS)

Date Printed: 10/24/2011

CONNECTED TO SEWER

MAP DISCLAIMER - NOTICE OF LIABILITY

This map is for assessment purposes only. It is not for legal description or conveyances. All information is subject to verification by any user. The Town of Branford and its mapping contractors assume no legal responsibility for the information contained herein.

0 400 Feet

N W E S

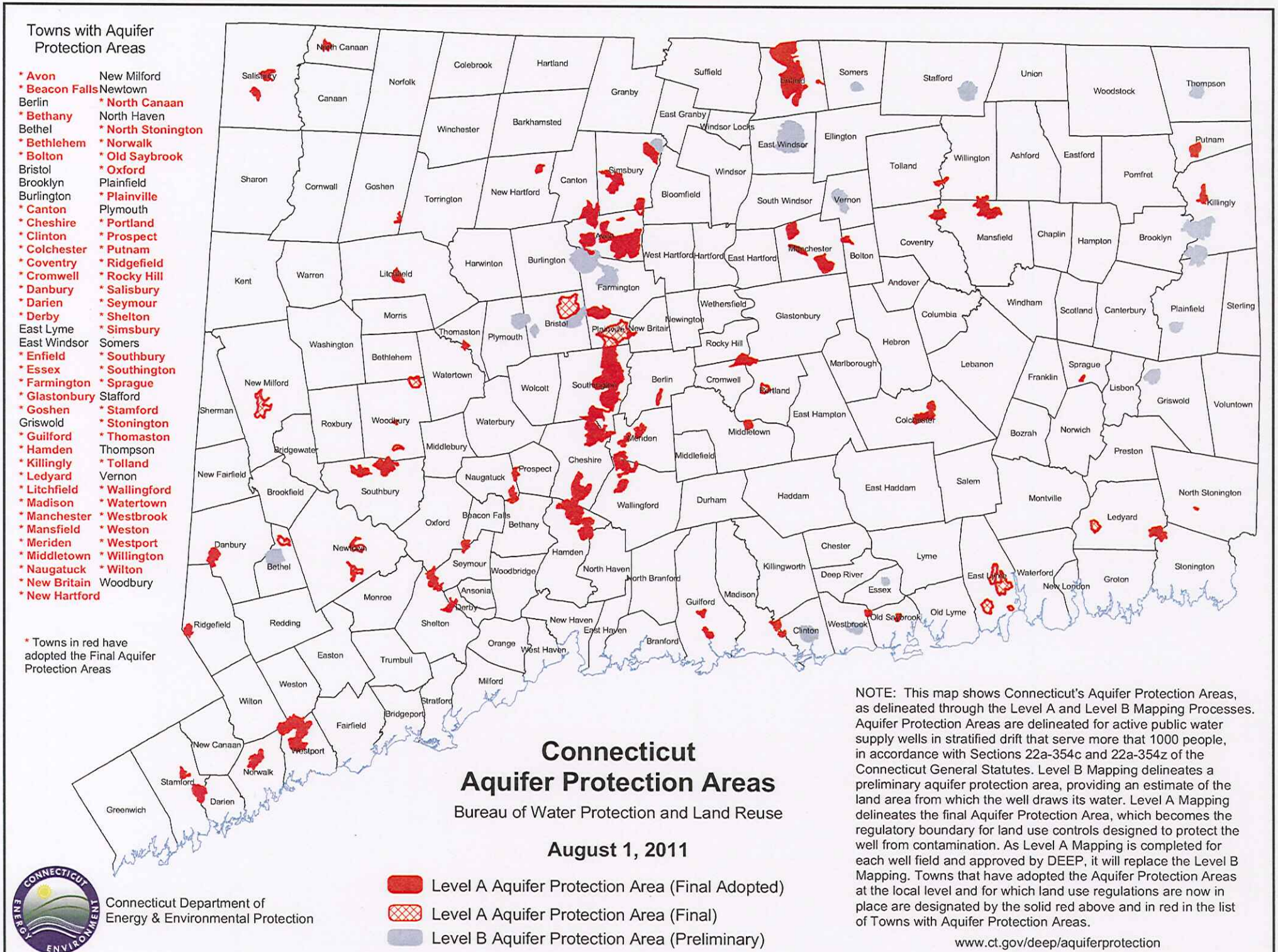
Towns with Aquifer Protection Areas
* Avon
* Beacon Falls
Berlin
* Bethany
Bethel
* Bethlehem
* Bolton
Bristol
Brooklyn
Burlington
* Canton
* Cheshire
* Clinton
* Colchester
* Coventry
* Cromwell
* Danbury
* Darien
* Derby
East Lyme
East Windsor
* Enfield
* Essex
* Farmington
* Glastonbury
* Goshen
Griswold
* Guilford
* Hamden
* Killingly
* Ledyard
* Litchfield
* Madison
* Manchester
* Mansfield
* Meriden
* Middletown
* Naugatuck
* New Britain
* New Hartford
New Milford
Newtown
* North Canaan
North Haven
* North Stonington
* Norwalk
* Old Saybrook
* Oxford
Plainfield
* Plainville
Plymouth
* Portland
* Prospect
* Putnam
* Ridgefield
* Rocky Hill
* Salisbury
* Seymour
* Shelton
* Simsbury
Somers
* Southbury
* Southington
* Sprague
Stafford
* Stamford
* Stonington
* Thomaston
Thompson
* Tolland
Vernon
* Wallingford
* Watertown
* Westbrook
* Weston
* Westport
* Willington
Wilton
Woodbury
* Towns in red have adopted the Final Aquifer Protection Areas
Connecticut Aquifer Protection Areas
Bureau of Water Protection and Land Reuse
August 1, 2011
Level A Aquifer Protection Area (Final Adopted)
Level A Aquifer Protection Area (Final)
Level B Aquifer Protection Area (Preliminary)
NOTE: This map shows Connecticut's Aquifer Protection Areas, as delineated through the Level A and Level B Mapping Processes. Aquifer Protection Areas are delineated for active public water supply wells in stratified drift that serve more that 1000 people, in accordance with Sections 22a-354c and 22a-354z of the Connecticut General Statutes. Level B Mapping delineates a preliminary aquifer protection area, providing an estimate of the land area from which the well draws its water. Level A Mapping delineates the final Aquifer Protection Area, which becomes the regulatory boundary for land use controls designed to protect the well from contamination. As Level A Mapping is completed for each well field and approved by DEEP, it will replace the Level B Mapping. Towns that have adopted the Aquifer Protection Areas at the local level and for which land use regulations are now in place are designated by the solid red above and in red in the list of Towns with Aquifer Protection Areas.
www.ct.gov/deep/aquiferprotection
Connecticut Department of Energy & Environmental Protection

Natural Diversity Data Base Areas

BRANFORD, CT

July 2011

State and Federal Listed Species & Significant Natural Communities

Town Boundary

NOTE: This map shows general locations of State and Federal Listed Species and Significant Natural Communities. Information on listed species is collected and compiled by the Natural Diversity Data Base (NDDB) from a number of data sources . Exact locations of species have been buffered to produce the general locations. Exact locations of species and communities occur somewhere in the shaded areas, not necessarily in the center.

This map is intended for use as a preliminary screening tool for conducting a Natural Diversity Data Base Review Request. To use the map, locate the project boundaries and any additional affected areas. If the project is within a shaded area; or overlapping a lake, pond or wetland that has shading; or upstream or downstream (by less than 1/2 mile) from a shaded area, the project may have a potential conflict with a listed species. For more information, complete a Request for Natural Diversity Data Base State Listed Species Review form (DEP-APP-007), and submit it to the NDDB along with the required maps and information. More detailed instructions are provided with the request form on our website.

www.ct.gov/dep/nddbrequest

This file has PDF Layers. Look for the Layers tab on the left. Expand the layers and use the "eye" icons to change visibility.

QUESTIONS: Department of Energy and Environmental Protection (DEEP)
79 Elm St., Hartford CT 06106
Phone (860) 424-3011

Connecticut Department of Energy & Environmental Protection
Bureau of Natural Resources
Wildlife Division

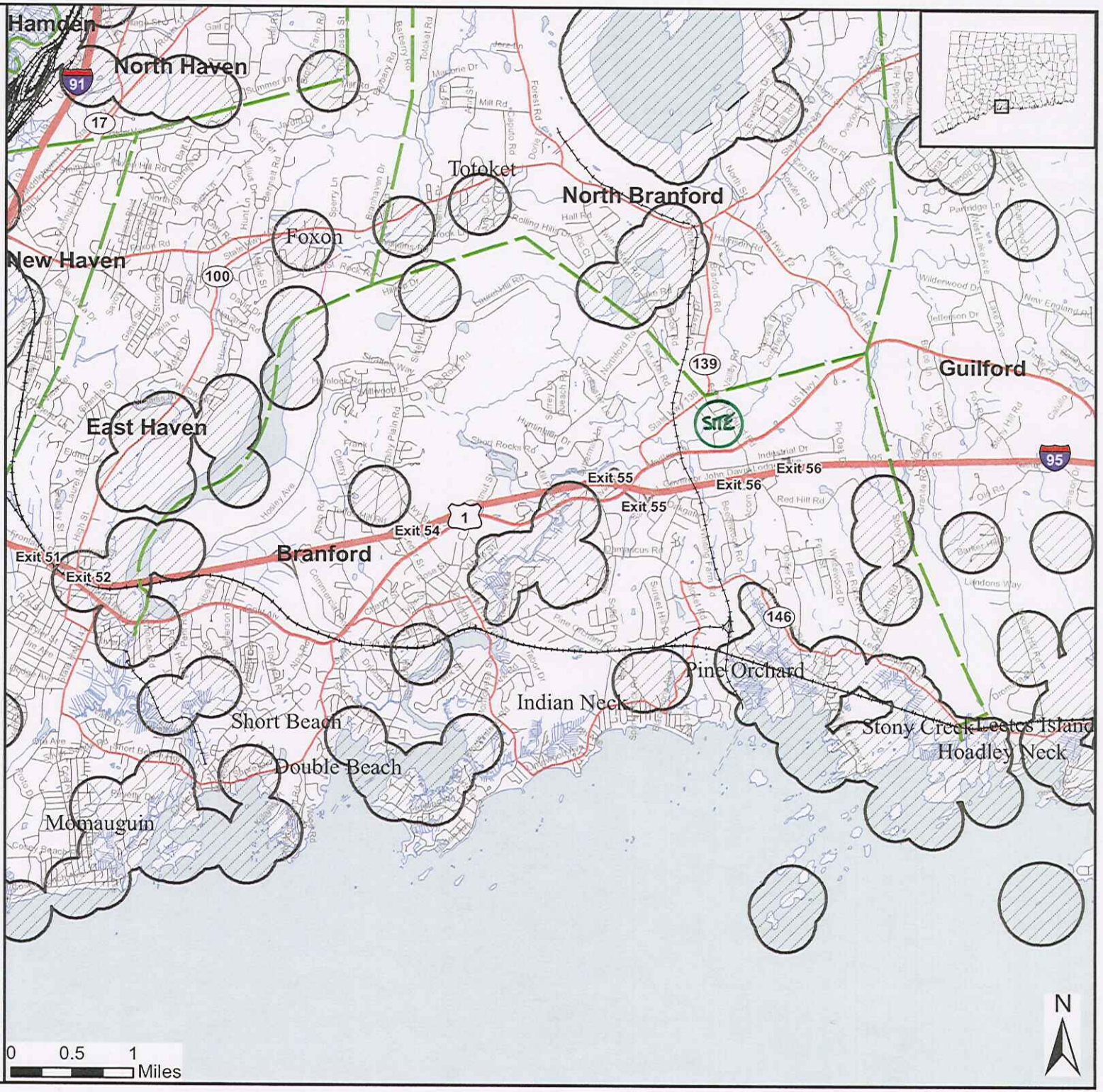

Town of Branford, CT
DPW Site Selection Study

PP-4: 20 North East Industrial Road

Buildings at 20 North East Industrial Road site

View north at 20 North East Industrial Road site

Town of Branford, CT
DPW Site Selection Study
PP-4: 20 North East Industrial Road
October 2011

View south at 20 North East Industrial Road site

View north at 20 North East Industrial Road site

Town of Branford, CT
DPW Site Selection Study
PP-4: 20 North East Industrial Road
October 2011

Town of Branford

Geographic Information System (GIS)

Date Printed: 9/13/2011

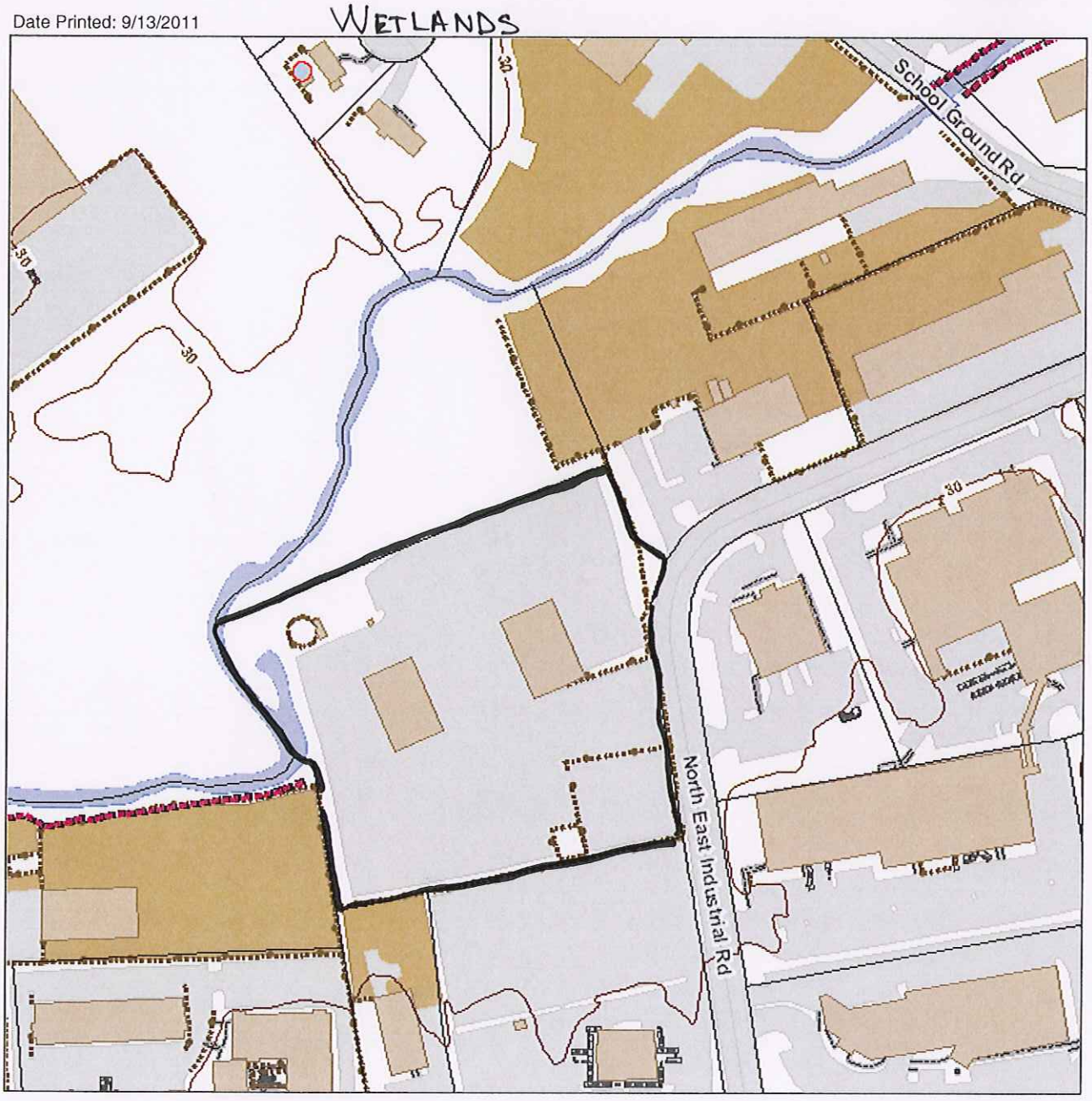

MAP DISCLAIMER - NOTICE OF LIABILITY

This map is for assessment purposes only. It is not for legal description or conveyances. All information is subject to verification by any user. The Town of Branford and its mapping contractors assume no legal responsibility for the information contained herein.

0 200 Feet

N W E S

Town of Branford

Geographic Information System (GIS)

Date Printed: 9/13/2011

ZONING

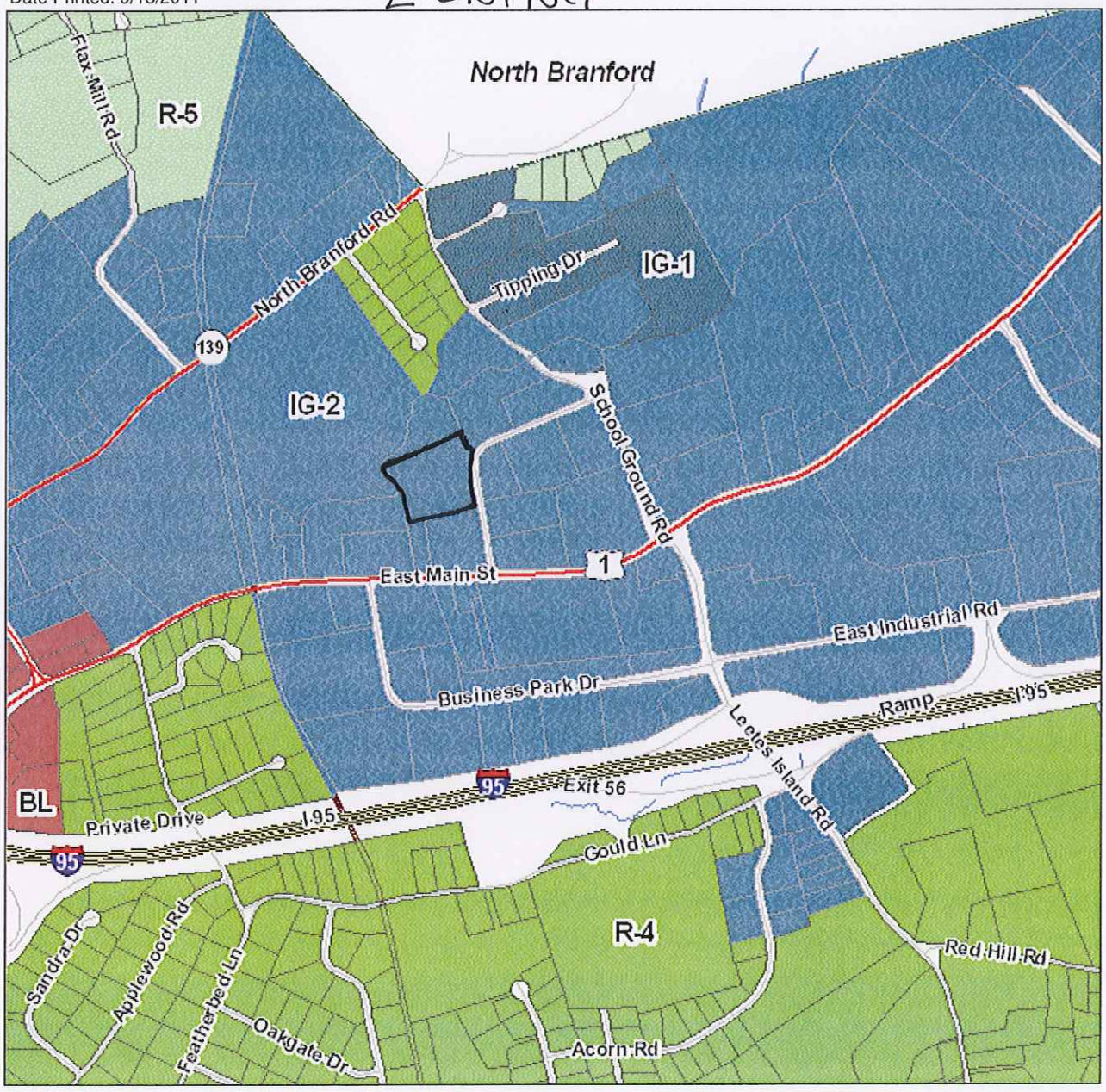

MAP DISCLAIMER - NOTICE OF LIABILITY

This map is for assessment purposes only. It is not for legal description or conveyances. All information is subject to verification by any user. The Town of Branford and its mapping contractors assume no legal responsibility for the information contained herein.

0 1,000 Feet

N W E S

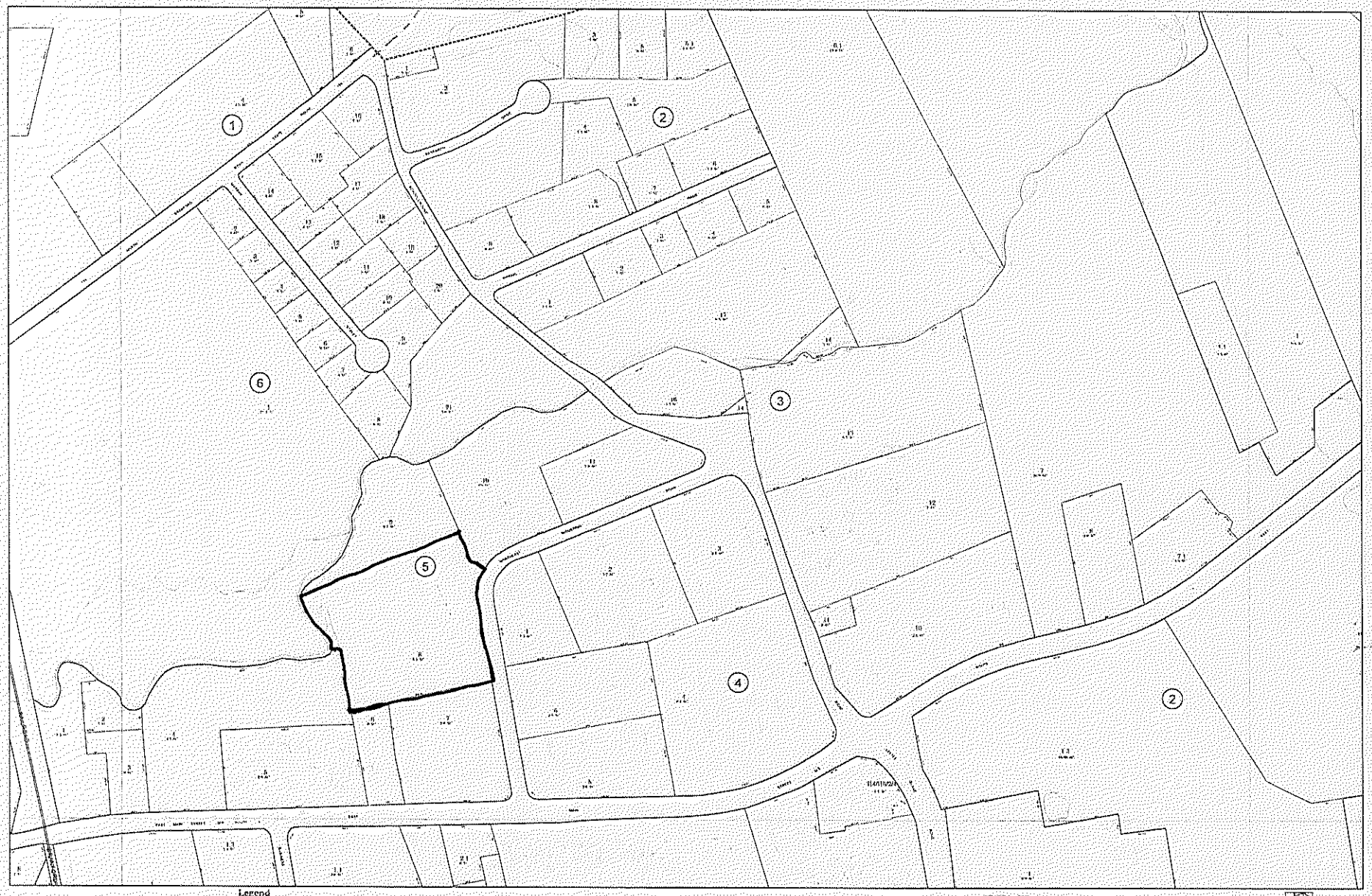

Legend

- Railroad Tracks
- ROW / Easement Boundary
- Water Feature (Swamp, Pond, River, Lake)
- Mean High Water Level
- Property Lines as of December 2007
- Block Boundary
- Town Boundary
- Measured Dimensions
- Source Map Dimensions
- Building Structure
- (5) Block Number
- 10 Lot Number
- 5 AC Acreage

ASSESSMENT MAP OF THE TOWN OF BRANFORD, CONNECTICUT 2007

DATES OF AERIAL PHOTOGRAPHY: MARCH 29 AND APRIL 6, 1999

MAP PRINTED JANUARY 2008

SCALE 1 = 200'

100 50 0 100 200 300 400 500 Feet

This map is for informational purposes only. All information is subject to verification by any user. The Town of Branford and its mapping contractors assume no legal responsibility for the information contained herein.

Map:H04

G03	H03	J03
G04		J04
G05	H05	J05

Property Location: 20 N E INDUSTRIAL RD | MAP ID: H04/000 005/ 00008/ / | Bldg Name: | State Use: 3140

Vision ID: 1146 | Account # 001719 | Bldg #: 1 of 2 | Sec #: 1 of 1 | Card 1 of 2 | Print Date: 04/15/2010 09:26

CURRENT OWNER	TOPO.	UTILITIES	STRT./ROAD	LOCATION
QUALITY CARRIERS INC	1 Level	1 All Public	1 Paved	5 Industrial
		3 Public Sewer	5 Curb & Gutter	
4041 PARK OAKS BLVD 200				
ATTN ACCOUNTING 901				
TAMPA, FL 33610				
Additional Owners:				

SUPPLEMENTAL DATA

Other ID:	H04/000/005/00008/	HLDG TK	
CONDO BLDG		SEPTIC	
CONDO UNIT		SEWER	
CONDO FLOOI		DISTRICT	
		CENSUS TR 1847	
GIS ID: H04/000/005/00008		ASSOC PID#	

CURRENT ASSESSMENT

Description	Code	Appraised Value	Assessed Value
COM LAND	2-1	467,600	327,300
COM BLDG	2-2	490,300	343,200
COM OUTBL	2-5	13,100	9,100
	Total	971,000	679,600

6014
BRANFORD, CT

VISION

RECORD OF OWNERSHIP	BK-VOL/PAGE	SALE DATE	q/u	v/i	SALE PRICE	V.C.
QUALITY CARRIERS INC	0854/1056	12/30/2003	U	I		25
CHEMICAL PROPERTIES INC	0265/0562	12/23/1974				

PREVIOUS ASSESSMENTS (HISTORY)

Yr.	Code	Assessed Value	Yr.	Code	Assessed Value	Yr.	Code	Assessed Value
2009	2-1	327,300	2008	2-1	360,030	2004	2-1	327,300
2009	2-2	375,400	2008	2-2	315,370	2004	2-2	286,700
2009	2-5	9,100	2008	2-5	9,240	2004	2-5	8,400
	Total:	711,800		Total:	684,640		Total:	622,400

EXEMPTIONS

Year	Type	Description	Amount
		Total:	

OTHER ASSESSMENTS

Code	Description	Number	Amount	Comm. Int.

This signature acknowledges a visit by a Data Collector or Assessor

ASSESSING NEIGHBORHOOD

NBHD/ SUB	NBHD NAME	STREET INDEX NAME	TRACING	BATCH
400/A				

NOTES

QUALITY CARRIERS-TERMINAL
14FT HIX30 FT DIA-
OPEN WASTE WATER BASIN
TNK1 31X10 DIA-UNUSED
WAS FOR OIL FOR BLD2TNK1
16HX10DIA HTNG OIL BLD2

APPRAISED VALUE SUMMARY

Appraised Bldg. Value (Card)	168,200
Appraised XF (B) Value (Bldg)	16,300
Appraised OB (L) Value (Bldg)	13,100
Appraised Land Value (Bldg)	467,600
Special Land Value	0
Total Appraised Parcel Value	971,000
Valuation Method:	C
Adjustment:	0
Net Total Appraised Parcel Value	971,000

BUILDING PERMIT RECORD

Permit ID	Issue Date	Type	Description	Amount	Insp. Date	% Comp.	Date Comp.	Comments

VISIT/ CHANGE HISTORY

Date	Type	IS	ID	Cd.	Purpose/Result
1/25/2010			DT	41	Change
10/20/2009			JWS	16	Reval Review
5/13/2009			GM	00	Measur+Listed
10/14/2004			BD	16	Reval Review
10/11/2002			BD	11	Field Review

LAND LINE VALUATION SECTION

B #	Use Code	Use Description	Zone	D	Frontage	Depth	Units	Unit Price	I. Factor	S.A.	Acre Disc	C. Factor	ST. Idx	Adj.	Notes- Adj	Special Pricing	Adj. Unit Price	Land Value
1	3140	TRK TERM	IG-2				1.38 AC	229,200.00	0.81	I	1.0000	1.00	400	1.00				255,000
1	3140	TRK TERM					3.78 AC	75,000.00	1.00	0	1.0000	0.75	400	1.00	WET			212,600
		Total Card Land Units:					5.16 AC	Parcel Total Land Area: 5.16 AC									Total Land Value:	467,600

Property Location: 20 N E INDUSTRIAL RD **MAP ID:** H04/000 005/ 00008/ / **Bldg Name:** **State Use:** 3140

Vision ID: 1146 **Account #** 001719 **Bldg #:** 1 of 2 **Sec #:** 1 of 1 **Card** 1 of 2 **Print Date:** 04/15/2010 09:26

CONSTRUCTION DETAIL

Element	Cd.	Ch.	Description
Style	51		Pre-Eng Garage
Model	96		Ind/Comm
Grade	03		C
Stories	1		
Occupancy	1		
Exterior Wall 1	27		Pre-finsh Metl
Exterior Wall 2			
Roof Structure	03		Gable/Hip
Roof Cover	01		Metal/Tin
Interior Wall 1	01		Minim/Masonry
Interior Wall 2			
Interior Floor 1	03		Concr-Finished
Interior Floor 2			
Heating Fuel	02		Oil
Heating Type	04		Forced Air-Duc
AC Type	01		None
Bldg Use	3140		TRK TERM
Total Rooms			
Total Bedrms	00		
Total Baths	0		
Heat/AC	02		HEAT/AC SPLIT
Frame Type	05		LT STEEL
Baths/Plumbing	02		AVERAGE
Ceiling/Wall	00		NONE
Rooms/Prtns	02		AVERAGE
Wall Height	18		
% Comn Wall	0		

CONSTRUCTION DETAIL (CONTINUED)

Element	Cd.	Ch.	Description

MIXED USE

Code	Description	Percentage
3140	TRK TERM	100

COST/MARKET VALUATION

Adj. Base Rate:	48.73
Replace Cost	305,878
AYB	1981
Dep Code	A
Remodel Rating	
Year Remodeled	
Dep %	20
Functional Obsinc	5
External Obsinc	20
Cost Trend Factor	
Status	
% Complete	
Overall % Cond	55
Apprais Val	168,200
Dep % Ovr	0
Dep Ovr Comment	
Misc Imp Ovr	0
Misc Imp Ovr Comment	
Cost to Cure Ovr	0
Cost to Cure Ovr Comment	

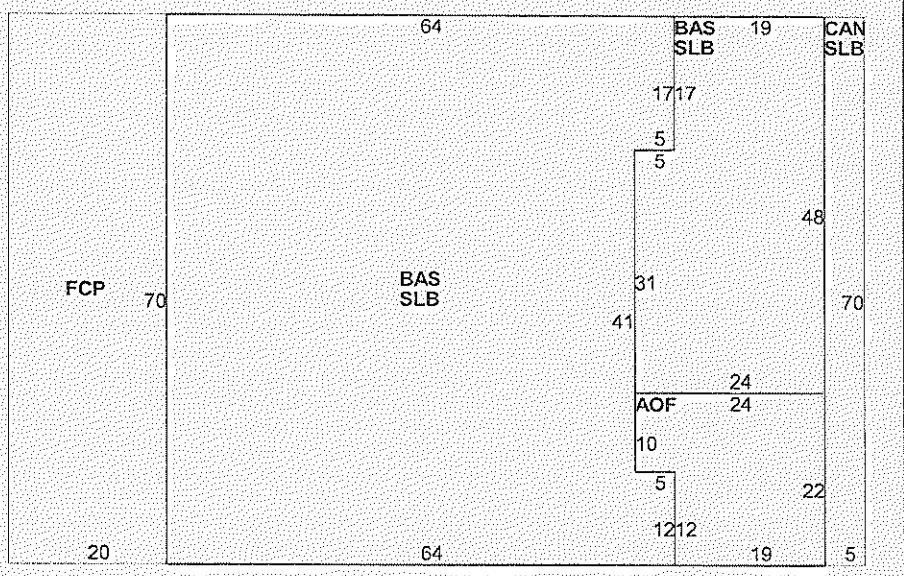

OB-OUTBUILDING & YARD ITEMS(L) / XF-BUILDING EXTRA FEATURES(B)

Code	Description	Sub	Sub Descript	L/B	Units	Unit Price	Yr	Gde	Dp Rt	Cnd	%Cnd	Apr Value
PAV1	PAVING-ASPI			L	6,400	1.65	2002		0		50	5,300
PAV2	PAVING-CON			L	720	3.30	2002		0		50	1,200
LT2	W/DOUBLE L			L	1	1,200.00	2002		0		50	600
SHD6	SHED COM M			L	194	22.00	2002		0		70	3,000
FN3	FENCE-6' CH/			L	610	9.90	2002		0		50	3,000
MEZ2	FINISHED			B	1,535	17.00	1989		1		100	14,400
A/C	AIR CONDITI			B	1,535	2.20	1989		1		100	1,900

BUILDING SUB-AREA SUMMARY SECTION

Code	Description	Living Area	Gross Area	Eff. Area	Unit Cost	Undeprec. Value
AOF	Office	468	468	585	60.91	28,507
BAS	First Floor	5,342	5,342	5,342	48.73	260,316
CAN	Canopy	0	350	70	9.75	3,411
FCP	Carport	0	1,400	280	9.75	13,644
SLB	Slab	0	5,692	0	0.00	0
	Ttl. Gross Liv/Lease Area:	5,810	13,252	6,277		305,878

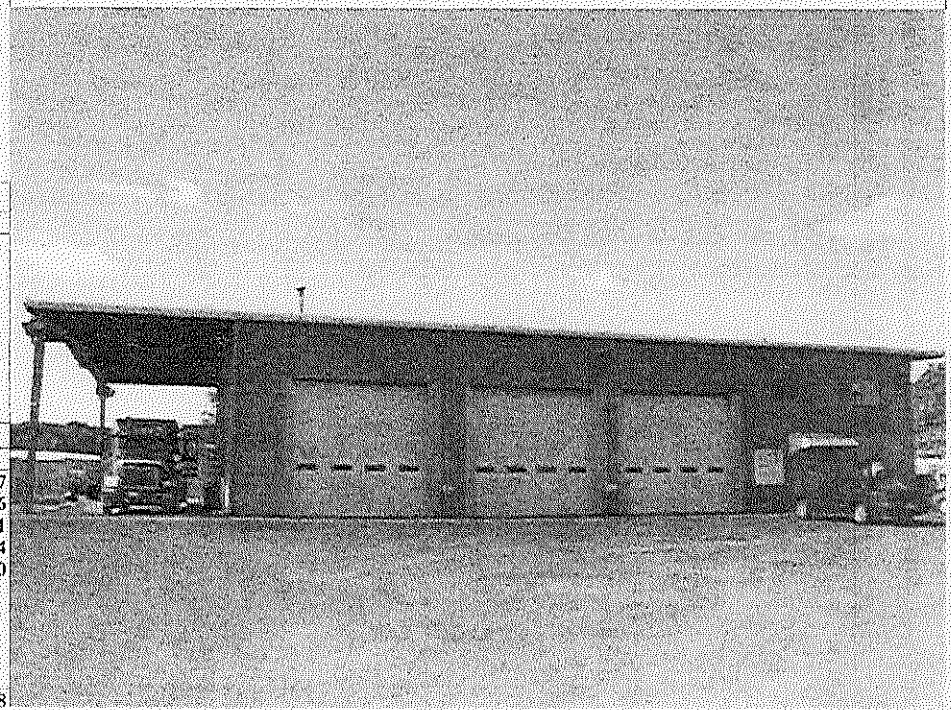

Property Location: 20 N E INDUSTRIAL RD **MAP ID:** H04/000 005/ 00008/ / **Bldg Name:** **State Use:** 3140

Vision ID: 1146 **Account #** 001719 **Bldg #:** 2 of 2 **Sec #:** 1 of 1 **Card** 2 of 2 **Print Date:** 04/15/2010 09:26

CONSTRUCTION DETAIL

Element	Cd.	Ch.	Description
Style	43		Car Wsh DrThru
Model	96		Ind/Comm
Grade	03		C
Stories	1		
Occupancy	1		
Exterior Wall 1	15		Concr/Cinder
Exterior Wall 2			
Roof Structure	01		Flat
Roof Cover	04		T&G/Rubber
Interior Wall 1	01		Minim/Masonry
Interior Wall 2			
Interior Floor 1	03		Concr-Finished
Interior Floor 2			
Heating Fuel	02		Oil
Heating Type	05		Hot Water
AC Type	01		None
Bldg Use	3140		TRK TERM
Total Rooms			
Total Bedrms	00		
Total Baths	0		
Heat/AC	00		NONE
Frame Type	03		MASONRY
Baths/Plumbing	02		AVERAGE
Ceiling/Wall	00		NONE
Rooms/Prtns	02		AVERAGE
Wall Height	20		
% Comn Wall	0		

CONSTRUCTION DETAIL (CONTINUED)

Element	Cd.	Ch.	Description

MIXED USE

Code	Description	Percentage
3140	TRK TERM	100

COST/MARKET VALUATION

Adj. Base Rate:	84.78
Replace Cost	578,793
AYB	1981
Dep Code	F
Remodel Rating	
Year Remodeled	
Dep %	23
Functional Obsinc	5
External Obsinc	20
Cost Trend Factor	
Status	
% Complete	
Overall % Cond	52
Apprais Val	301,000
Dep % Ovr	0
Dep Ovr Comment	
Misc Imp Ovr	0
Misc Imp Ovr Comment	
Cost to Cure Ovr	0
Cost to Cure Ovr Comment	

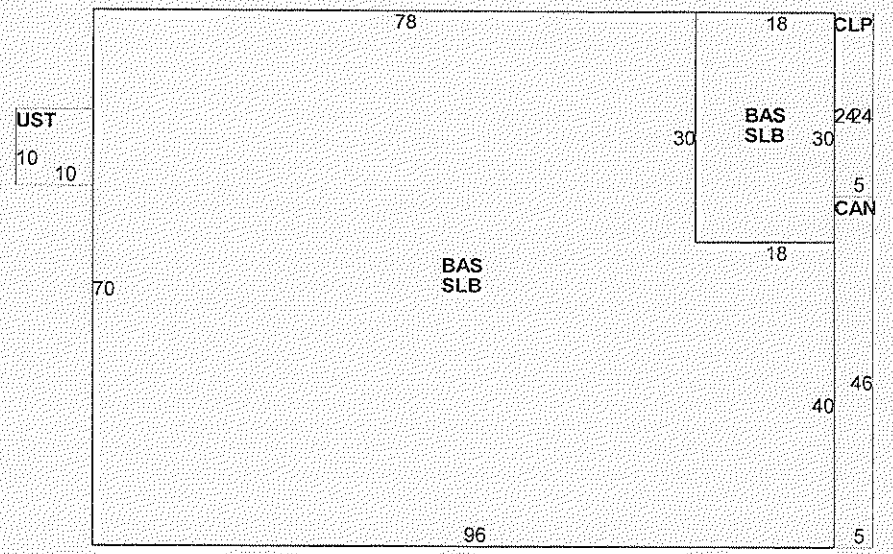

OB-OUTBUILDING & YARD ITEMS(L) / XF-BUILDING EXTRA FEATURES(B)

Code	Description	Sub	Sub Descript	L/B	Units	Unit Price	Yr	Gde	Dp Rt	Cnd	%Cnd	Apr Value
MEZ2	FINISHED			B	540	17.00	1986		1		100	4,800

BUILDING SUB-AREA SUMMARY SECTION

Code	Description	Living Area	Gross Area	Eff. Area	Unit Cost	Undeprec. Value
BAS	First Floor	6,720	6,720	6,720	84.78	569,722
CAN	Canopy	0	230	46	16.96	3,900
CLP	Loading Platform Covered	0	120	36	25.43	3,052
SLB	Slab	0	6,720	0	0.00	0
UST	Utility, Storage, Unfinished	0	100	25	21.20	2,120
	Ttl. Gross Liv/Lease Area:	6,720	13,890	6,827		578,793

Property Location: 20 N E INDUSTRIAL RD | MAP ID: H04/000 005/ 00008/ / | Bldg Name: | State Use: 3140

Vision ID: 1146 | Account # 001719 | Bldg #: 2 of 2 | Sec #: 1 of 1 | Card 2 of 2 | Print Date: 04/15/2010 09:26

CURRENT OWNER	TOPO.	UTILITIES	STRT./ROAD	LOCATION
QUALITY CARRIERS INC	1 Level	1 All Public	1 Paved	5 Industrial
		3 Public Sewer	5 Curb & Gutter	
4041 PARK OAKS BLVD 200				
ATTN ACCOUNTING 901				
TAMPA, FL 33610				
Additional Owners:				

SUPPLEMENTAL DATA

Other ID: H04/000/005/00008/	HLDG TK
CONDO BLDG	SEPTIC
CONDO UNIT	SEWER
CONDO FLOOI	DISTRICT
	CENSUS TR 1847
GIS ID: H04/000/005/00008	ASSOC PID#

CURRENT ASSESSMENT

Description	Code	Appraised Value	Assessed Value
COM LAND	2-1	467,600	327,300
COM BLDG	2-2	490,300	343,200
COM OUTBL	2-5	13,100	9,100
	Total	971,000	679,600

6014
BRANFORD, CT

VISION

RECORD OF OWNERSHIP

	BK-VOL/PAGE	SALE DATE	q/u	v/i	SALE PRICE	V.C.
QUALITY CARRIERS INC	0854/1056	12/30/2003	U	I		25
CHEMICAL PROPERTIES INC	0265/0562	12/23/1974				

PREVIOUS ASSESSMENTS (HISTORY)

Yr.	Code	Assessed Value	Yr.	Code	Assessed Value	Yr.	Code	Assessed Value
2009	2-1	327,300	2008	2-1	360,030	2004	2-1	327,300
2009	2-2	375,400	2008	2-2	315,370	2004	2-2	286,700
2009	2-5	9,100	2008	2-5	9,240	2004	2-5	8,400
	Total:	711,800		Total:	684,640		Total:	622,400

EXEMPTIONS

Year	Type	Description	Amount
		Total:	

OTHER ASSESSMENTS

Code	Description	Number	Amount	Comm. Int.

This signature acknowledges a visit by a Data Collector or Assessor

ASSESSING NEIGHBORHOOD

NBHD/ SUB	NBHD NAME	STREET INDEX NAME	TRACING	BATCH
400/A				

NOTES

QUALAWASH-TANK TRAILER
WASHING FACILITY
SPECIALIZES IN CHEMICAL
TANK TRAILER WASHING
CONTRACT TO WASH QUALITY
CARRIERS + OTHER CARRIERS

TANK TRAILERS
REAR BLDG
VACANT 5/09
FUNC=SPECIAL USE/LACK MARKETABILITY

APPRAISED VALUE SUMMARY

Appraised Bldg. Value (Card)	301,000
Appraised XF (B) Value (Bldg)	4,800
Appraised OB (L) Value (Bldg)	0
Appraised Land Value (Bldg)	0
Special Land Value	0
Total Appraised Parcel Value	971,000
Valuation Method:	C
Adjustment:	0
Net Total Appraised Parcel Value	**971,000**

BUILDING PERMIT RECORD

Permit ID	Issue Date	Type	Description	Amount	Insp. Date	% Comp.	Date Comp.	Comments

VISIT/ CHANGE HISTORY

Date	Type	IS	ID	Cd.	Purpose/Result
1/25/2010			DT	41	Change
10/20/2009			JWS	16	Reval Review
5/13/2009			GM	00	Measur+Listed
10/14/2004			BD	16	Reval Review
10/11/2002			BD	11	Field Review

LAND LINE VALUATION SECTION

B #	Use Code	Use Description	Zone	D	Frontage	Depth	Units	Unit Price	I. Factor	S.A.	Acre Disc	C. Factor	ST. Idx	Adj.	Notes- Adj	Special Pricing	Adj. Unit Price	Land Value
2	3140	TRK TERM	IG-2				0.00 AC	0.00	1.00	0	1.0000	1.00		0.00				0

Total Card Land Units: 0.00 AC | Parcel Total Land Area: 5.16 AC | Total Land Value: 0

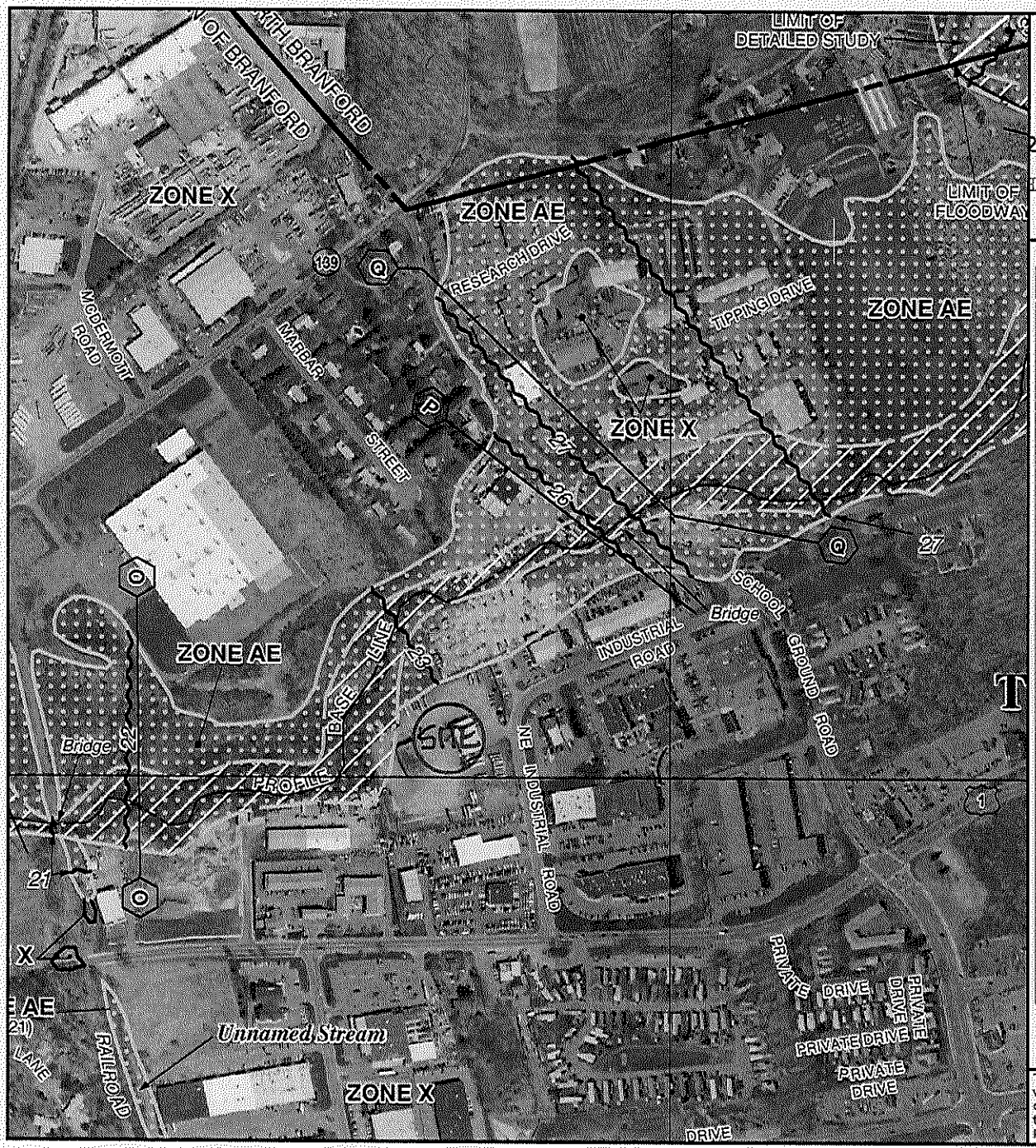

MAP SCALE 1" = 500'

250 0 500 1000 FEET

METER

PANEL 0467H

NATIONAL FLOOD INSURANCE PROGRAM

FIRM

FLOOD INSURANCE RATE MAP

NEW HAVEN COUNTY, CONNECTICUT

(ALL JURISDICTIONS)

PANEL 467 OF 635

(SEE MAP INDEX FOR FIRM PANEL LAYOUT)

CONTAINS:

COMMUNITY	NUMBER	PANEL	SUFFIX
BRANFORD, TOWN OF	090073	0467	H
NORTH BRANFORD, TOWN OF	090085	0467	H

Notice to User: The **Map Number** shown below should be used when placing map orders; the **Community Number** shown above should be used on insurance applications for the subject community.

MAP NUMBER
09009C0467H

EFFECTIVE DATE
DECEMBER 17, 2010

Federal Emergency Management Agency

This is an official copy of a portion of the above referenced flood map. It was extracted using F-MIT On-Line. This map does not reflect changes or amendments which may have been made subsequent to the date on the title block. For the latest product information about National Flood Insurance Program flood maps check the FEMA Flood Map Store at www.msc.fema.gov

Town of Branford

Geographic Information System (GIS)

Date Printed: 10/24/2011

CONNECTED TO SEWER

MAP DISCLAIMER - NOTICE OF LIABILITY

This map is for assessment purposes only. It is not for legal description or conveyances. All information is subject to verification by any user. The Town of Branford and its mapping contractors assume no legal responsibility for the information contained herein.

0 400 Feet

N W E S

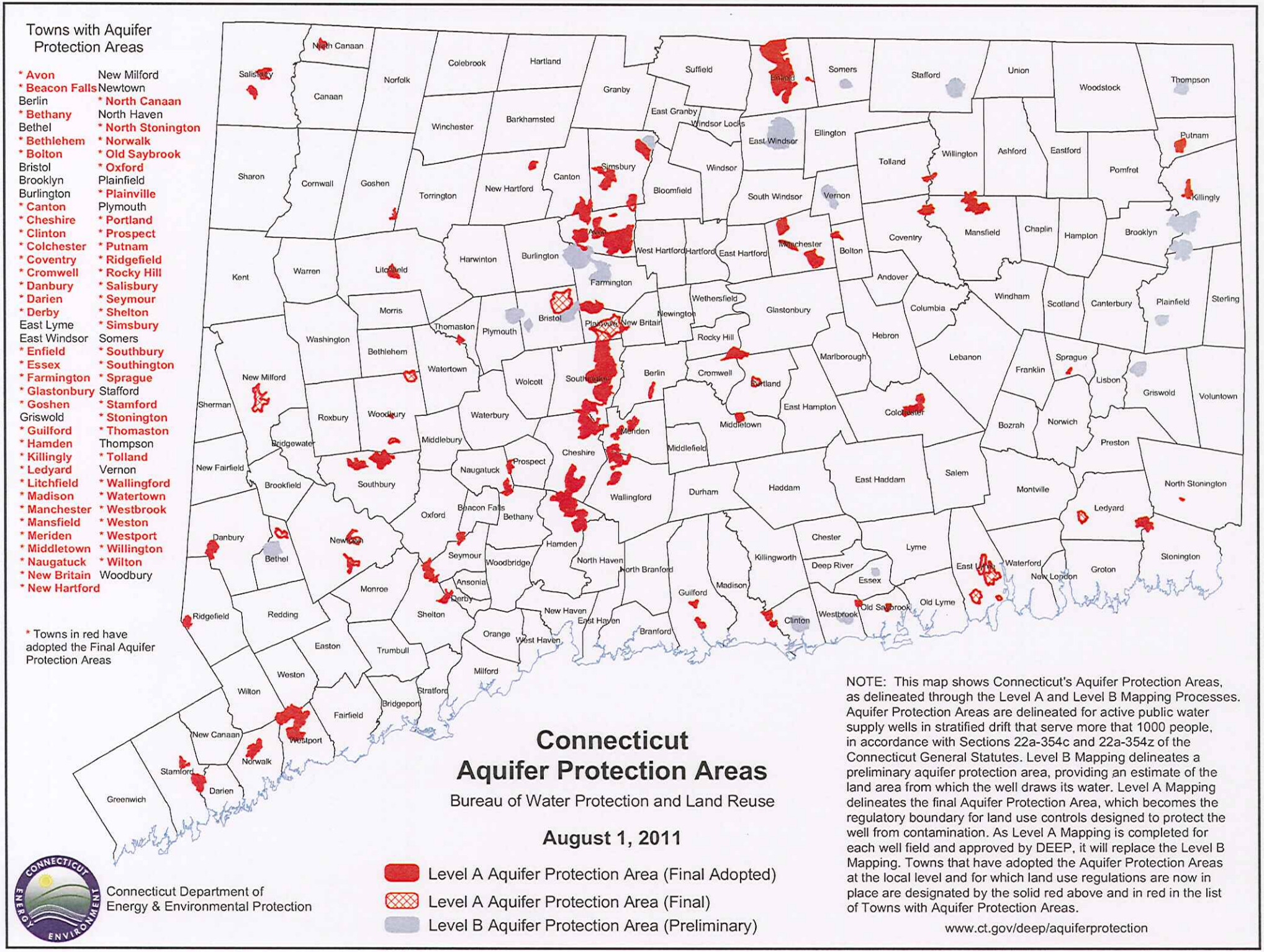
Towns with Aquifer Protection Areas
* Avon
* Beacon Falls
Berlin
* Bethany
Bethel
* Bethlehem
* Bolton
Bristol
Brooklyn
Burlington
* Canton
* Cheshire
* Clinton
* Colchester
* Coventry
* Cromwell
* Danbury
* Darien
* Derby
East Lyme
East Windsor
* Enfield
* Essex
* Farmington
* Glastonbury
* Goshen
Griswold
* Guilford
* Hamden
* Killingly
* Ledyard
* Litchfield
* Madison
* Manchester
* Mansfield
* Meriden
* Middletown
* Naugatuck
* New Britain
* New Hartford
New Milford
Newtown
* North Canaan
North Haven
* North Stonington
* Norwalk
* Old Saybrook
* Oxford
Plainfield
* Plainville
Plymouth
* Portland
* Prospect
* Putnam
* Ridgefield
* Rocky Hill
* Salisbury
* Seymour
* Shelton
* Simsbury
Somers
* Southbury
* Southington
* Sprague
Stafford
* Stamford
* Stonington
* Thomaston
Thompson
* Tolland
Vernon
* Wallingford
* Watertown
* Westbrook
* Weston
* Westport
* Willington
* Wilton
Woodbury
* Towns in red have adopted the Final Aquifer Protection Areas
Connecticut Aquifer Protection Areas
Bureau of Water Protection and Land Reuse
August 1, 2011
Level A Aquifer Protection Area (Final Adopted)
Level A Aquifer Protection Area (Final)
Level B Aquifer Protection Area (Preliminary)
NOTE: This map shows Connecticut's Aquifer Protection Areas, as delineated through the Level A and Level B Mapping Processes. Aquifer Protection Areas are delineated for active public water supply wells in stratified drift that serve more that 1000 people, in accordance with Sections 22a-354c and 22a-354z of the Connecticut General Statutes. Level B Mapping delineates a preliminary aquifer protection area, providing an estimate of the land area from which the well draws its water. Level A Mapping delineates the final Aquifer Protection Area, which becomes the regulatory boundary for land use controls designed to protect the well from contamination. As Level A Mapping is completed for each well field and approved by DEEP, it will replace the Level B Mapping. Towns that have adopted the Aquifer Protection Areas at the local level and for which land use regulations are now in place are designated by the solid red above and in red in the list of Towns with Aquifer Protection Areas.
www.ct.gov/deep/aquiferprotection
Connecticut Department of Energy & Environmental Protection
CONNECTICUT ENERGY ENVIRONMENT

Natural Diversity Data Base Areas

BRANFORD, CT

July 2011

State and Federal Listed Species & Significant Natural Communities

Town Boundary

NOTE: This map shows general locations of State and Federal Listed Species and Significant Natural Communities. Information on listed species is collected and compiled by the Natural Diversity Data Base (NDDB) from a number of data sources . Exact locations of species have been buffered to produce the general locations. Exact locations of species and communities occur somewhere in the shaded areas, not necessarily in the center.

This map is intended for use as a preliminary screening tool for conducting a Natural Diversity Data Base Review Request. To use the map, locate the project boundaries and any additional affected areas. If the project is within a shaded area; or overlapping a lake, pond or wetland that has shading; or upstream or downstream (by less than 1/2 mile) from a shaded area, the project may have a potential conflict with a listed species. For more information, complete a Request for Natural Diversity Data Base State Listed Species Review form (DEP-APP-007), and submit it to the NDDB along with the required maps and information. More detailed instructions are provided with the request form on our website.

www.ct.gov/dep/nddbrequest

This file has PDF Layers. Look for the Layers tab on the left. Expand the layers and use the "eye" icons to change visibility.

QUESTIONS: Department of Energy and Environmental Protection (DEEP)
79 Elm St., Hartford CT 06106
Phone (860) 424-3011

Connecticut Department of Energy & Environmental Protection
Bureau of Natural Resources
Wildlife Division

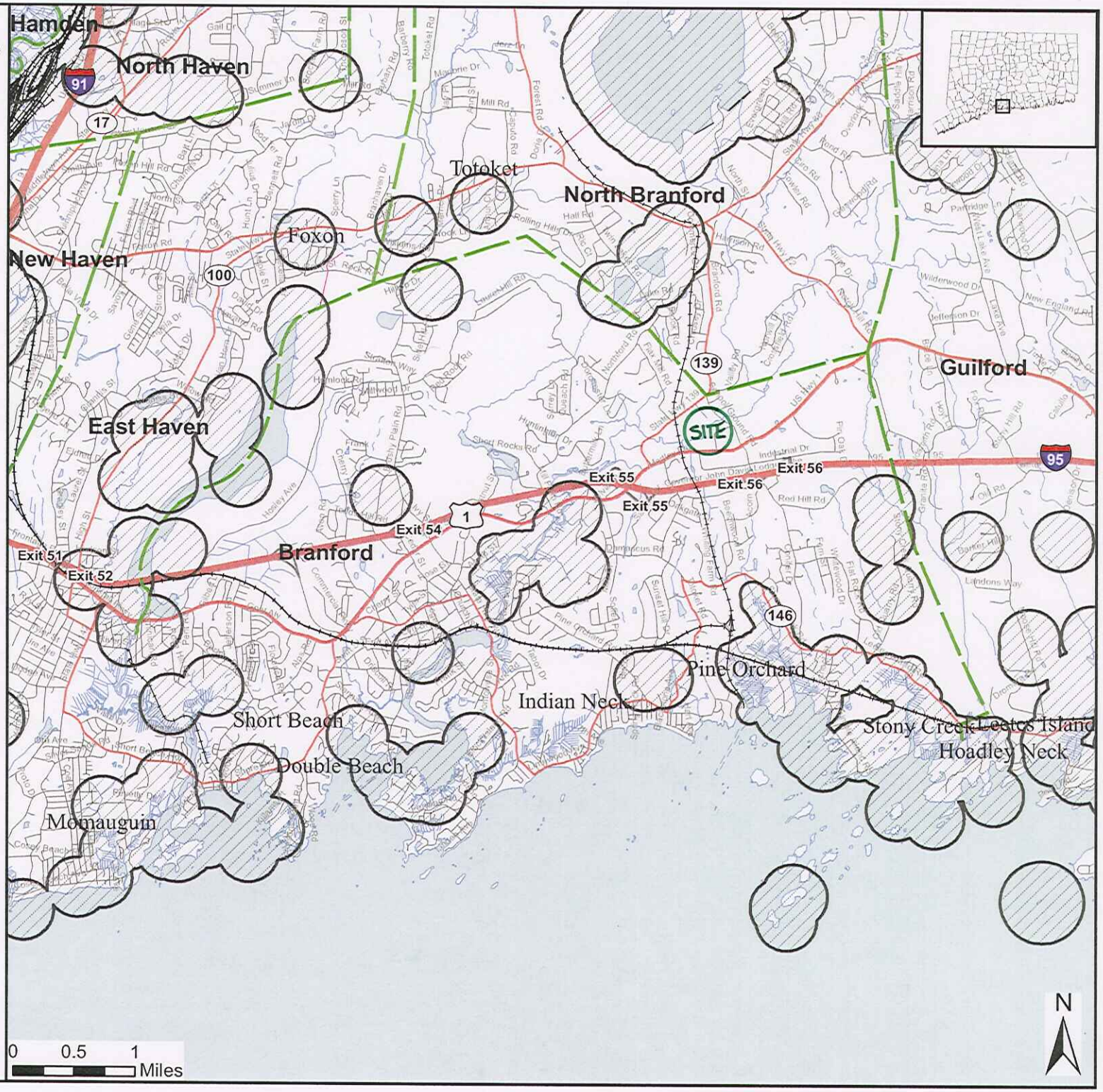

Town of Branford, CT
DPW Site Selection Study

PP-5: 688 East Main Street

View south at 688 East Main Street site

Middle section of 688 East Main Street site

Town of Branford, CT
DPW Site Selection Study
PP-5: 688 East Main Street
October 2011

View north at 688 East Main Street site

View south at 688 East Main Street site

Town of Branford, CT
DPW Site Selection Study
PP-5: 688 East Main Street
October 2011

Town of Branford

Geographic Information System (GIS)

Date Printed: 9/13/2011

MAP DISCLAIMER - NOTICE OF LIABILITY

This map is for assessment purposes only. It is not for legal description or conveyances. All information is subject to verification by any user. The Town of Branford and its mapping contractors assume no legal responsibility for the information contained herein.

0 200 Feet

N W E S

Town of Branford

Geographic Information System (GIS)

Date Printed: 9/13/2011

ZONING

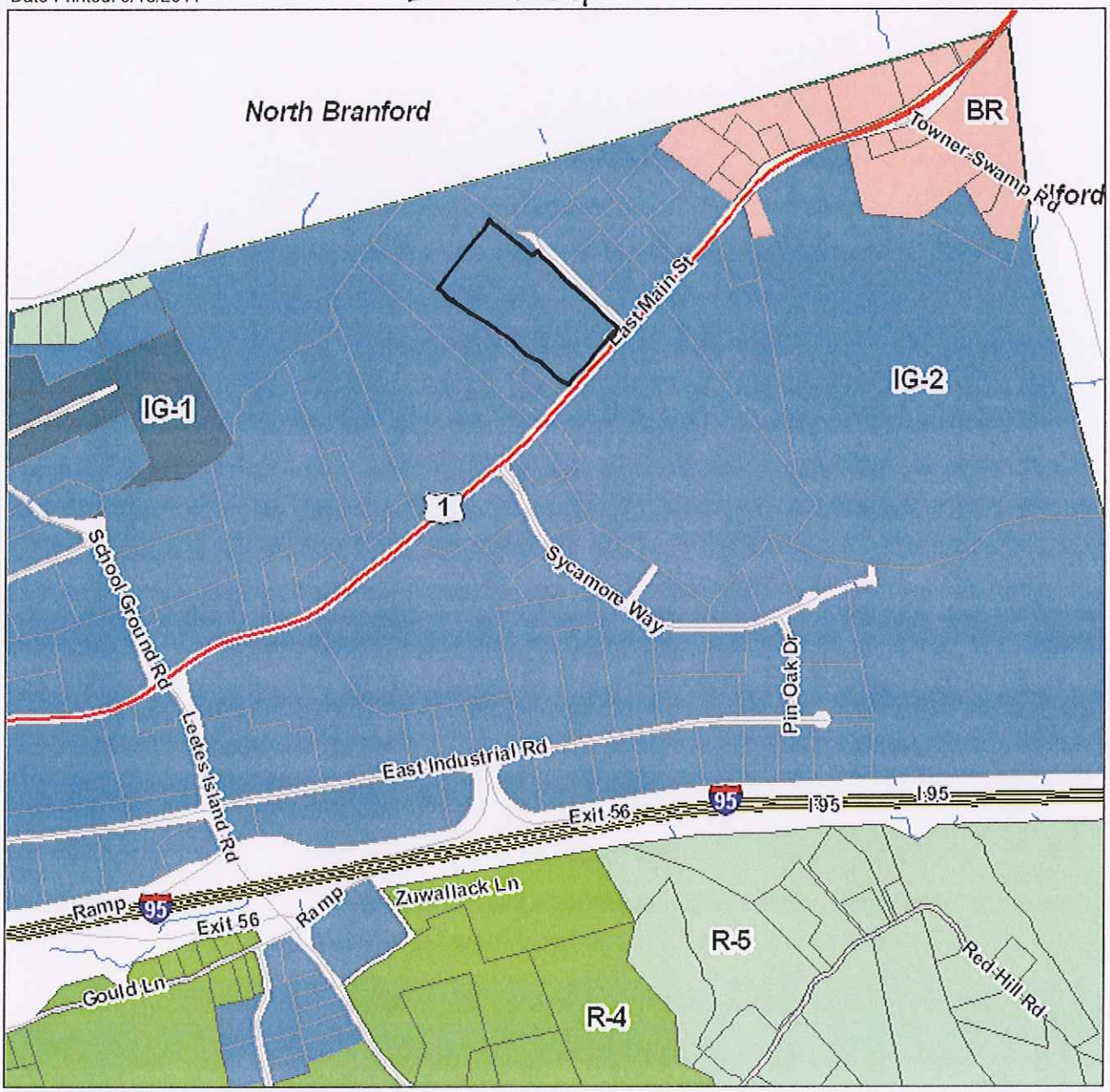

MAP DISCLAIMER - NOTICE OF LIABILITY

This map is for assessment purposes only. It is not for legal description or conveyances. All information is subject to verification by any user. The Town of Branford and its mapping contractors assume no legal responsibility for the information contained herein.

0 1,000 Feet

N W E S

Legend

- Railroad Tracks
- ROW / Easement Boundary
- Water Feature (Swamp, Pond, River, Lake)
- Mean High Water Level
- Property Lines as of December 2007
- Block Boundary
- Town Boundary
- (0.03) Measured Dimensions
- 50.00 Source Map Dimensions
- Building Structure
- (5) Block Number
- 10 Lot Number
- 5.0 AC Acreage

ASSESSMENT MAP OF
THE TOWN OF BRANFORD, CONNECTICUT 2007

DATES OF AERIAL PHOTOGRAPHY: MARCH 29 AND APRIL 6, 1999

MAP PRINTED JANUARY 2008

SCALE 1" = 200'

100 50 0 100 200 300 400 500 Feet

This Map is for informational purposes only. All information is subject to verification by any user. The Town of Branford and its mapping contractors assume no legal responsibility for the information contained hereon.

Map: J03

H03		K03
H04	J04	K04
H05	J05	K05

Property Location: 688 EAST MAIN ST | MAP ID: J03/000 001/ 00002/ / | Bldg Name: | State Use: 4040

Vision ID: 1201 | Account # 002051 | Bldg #: 1 of 1 | Sec #: 1 of 1 | Card 1 of 1 | Print Date: 04/15/2010 09:30

CURRENT OWNER	TOPO.	UTILITIES	STRT./ROAD	LOCATION
PARISH FARM PARTNERS LLC	2 Above Street	1 All Public	1 Paved	5 Industrial
164 NORTH MAIN ST	4 Rolling		5 Curb & Gutter	
BRANFORD, CT 06405				
Additional Owners:				

SUPPLEMENTAL DATA

Other ID:	J03/000/001/00002/	HLDG TK	
CONDO BLDG		SEPTIC	
CONDO UNIT		SEWER	
CONDO FLOOI		DISTRICT	
		CENSUS TR 1847	
GIS ID: J03/000/001/00002		ASSOC PID#	

CURRENT ASSESSMENT

Description	Code	Appraised Value	Assessed Value
IND LAND	3-1	1,979,300	1,385,500
IND BLDG	3-2	2,430,700	1,701,600
IND IMPR	3-3	50,600	35,400
	Total	4,460,600	3,122,500

6014
BRANFORD, CT

VISION

RECORD OF OWNERSHIP

RECORD OF OWNERSHIP	BK-VOL/PAGE	SALE DATE	q/u	v/i	SALE PRICE	V.C.
PARISH FARM PARTNERS LLC	0780/0973	09/26/2002	U		0	
PARISH FARMS PARTNERS LLC	0724/0181	05/04/2001	U	I	182,762	8
PARISH FARMS PARTNERS LLC 28	0724/0178	05/04/2001	U	I	283,904	8
PARISH FARMS PARTNERS LLC 28	0724/0175	05/04/2001	U	I	933,333	8
COOKE NELSON B +	0531/0480					

PREVIOUS ASSESSMENTS (HISTORY)

Yr.	Code	Assessed Value	Yr.	Code	Assessed Value	Yr.	Code	Assessed Value
2009	3-1	1,385,500	2008	3-1	1,251,300	2004	3-1	1,251,300
2009	3-2	1,701,600	2008	3-2	1,879,000	2004	3-2	1,861,500
2009	3-3	35,400	2008	3-3	64,300	2004	3-3	32,200
	Total:	3,122,500		Total:	3,194,600		Total:	3,145,000

EXEMPTIONS

Year	Type	Description	Amount
		Total:	

OTHER ASSESSMENTS

Code	Description	Number	Amount	Comm. Int.

This signature acknowledges a visit by a Data Collector or Assessor

APPRAISED VALUE SUMMARY

Appraised Bldg. Value (Card)	2,373,800
Appraised XF (B) Value (Bldg)	56,900
Appraised OB (L) Value (Bldg)	50,600
Appraised Land Value (Bldg)	1,979,300
Special Land Value	0
Total Appraised Parcel Value	4,460,600
Valuation Method:	C
Adjustment:	0
Net Total Appraised Parcel Value	4,460,600

ASSESSING NEIGHBORHOOD

NBHD/ SUB	NBHD NAME	STREET INDEX NAME	TRACING	BATCH
450/A				

NOTES

ORCHARD RESEARCH PARK — BAS=1 VACANT UNFINISHED UNIT 10-1-09

ACCESS BY BALDWIN DR — SPA= R & D/ ECO = MKT

SOURCE MEDICAL — GL09 73% GD X 95% COMPLETE=UC69

WIN WHOLESALE

IWD LLC — 50 X 50 CLEAN ROOM

AFFOMEX CORP

BUILDING PERMIT RECORD

Permit ID	Issue Date	Type	Description	Amount	Insp. Date	% Comp.	Date Comp.	Comments
20060577	05/05/2006	CM	Commercial	175,000	05/13/2007	100		TENANT FIT UP,OFC+
21450	10/12/2004	BP		0	09/28/2005	100	09/28/2005	TENANT FIT UP
	11/12/2002		CO 8320	0		100		
18287	07/18/2002	CM	Commercial	0		100		NEW BLDG
17267	01/22/2002	CM	Commercial	1,200,000	04/18/2002	100		36K SF BLD
16988	11/28/2001	CM	Commercial	60,000	04/18/2002	100		FOOTNGS/FND WLS

VISIT/ CHANGE HISTORY

Date	Type	IS	ID	Cd.	Purpose/Result
10/21/2009			JWS	16	Reval Review
4/16/2009			GM	00	Measur+Listed
5/13/2007			MM	37	Bldg Permit
9/29/2005	01		BN	37	Bldg Permit
10/14/2004			BD	11	Field Review

LAND LINE VALUATION SECTION

B #	Use Code	Use Description	Zone	D	Frontage	Depth	Units		Unit Price	I. Factor	S.A.	Acre Disc	C. Factor	ST. Idx	Adj.	Notes- Adj	Special Pricing	Adj. Unit Price	Land Value
1	4040	R-D FACIL	IG-2		1415		1.38	AC	229,200.00	0.81	I	1.0000	1.00	450	1.20				306,000
1	4040	R-D FACIL					11.62	AC	150,000.00	1.00	0	1.0000	0.80	450	1.20	+FF/DEV/TOPO			1,673,300

Total Card Land Units: 13.00 AC | Parcel Total Land Area: 13 AC | Total Land Value: 1,979,300

Property Location: 688 EAST MAIN ST | MAP ID: J03/000 001/ 00002/ / | Bldg Name: | State Use: 4040

Vision ID: 1201 | Account # 002051 | Bldg #: 1 of 1 | Sec #: 1 of 1 | Card 1 of 1 | Print Date: 04/15/2010 09:30

CONSTRUCTION DETAIL

Element	Cd.	Ch.	Description
Style	41		Research/Devel
Model	96		Ind/Comm
Grade	04		C +
Stories	1		
Occupancy	5		
Exterior Wall 1	15		Concr/Cinder
Exterior Wall 2			
Roof Structure	01		Flat
Roof Cover	04		T&G/Rubber
Interior Wall 1	05		Drywall
Interior Wall 2			
Interior Floor 1	14		Carpet
Interior Floor 2	05		Vinyl/Asphalt
Heating Fuel	03		Gas
Heating Type	04		Forced Air-Duc
AC Type	03		Central
Bldg Use	4040		R-D FACIL
Total Rooms			
Total Bedrms	00		
Total Baths	0		
Heat/AC	02		HEAT/AC SPLIT
Frame Type	03		MASONRY
Baths/Plumbing	02		AVERAGE
Ceiling/Wall	05		SUS-CEIL & WL
Rooms/Prtns	02		AVERAGE
Wall Height	16		
% Comn Wall	0		

CONSTRUCTION DETAIL (CONTINUED)

Element	Cd.	Ch.	Description

MIXED USE

Code	Description	Percentage
4040	R-D FACIL	100

COST/MARKET VALUATION

Adj. Base Rate:	84.44
Replace Cost	3,440,345
AYB	2002
Dep Code	A
Remodel Rating	
Year Remodeled	
Dep %	7
Functional Obsinc	
External Obsinc	20
Cost Trend Factor	
Status	UC
% Complete	69
Overall % Cond	69
Apprais Val	2,373,800
Dep % Ovr	0
Dep Ovr Comment	
Misc Imp Ovr	0
Misc Imp Ovr Comment	
Cost to Cure Ovr	0
Cost to Cure Ovr Comment	

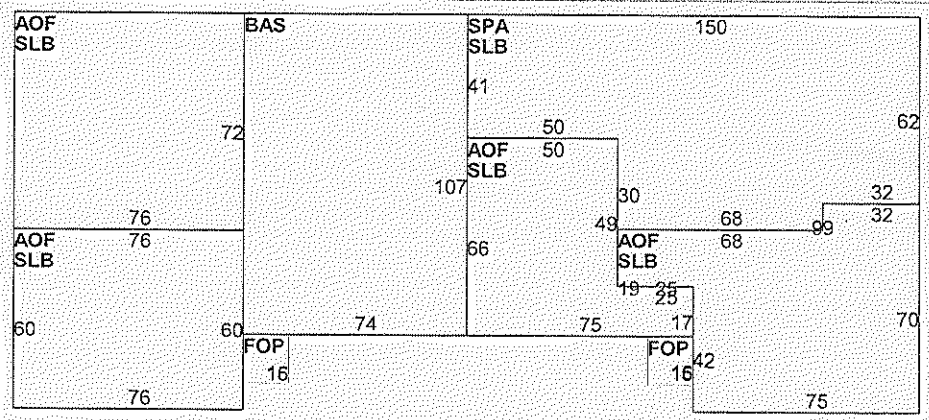

OB-OUTBUILDING & YARD ITEMS(L) / XF-BUILDING EXTRA FEATURES(B)

Code	Description	Sub	Sub Descript	L/B	Units	Unit Price	Yr	Gde	Dp Rt	Cnd	%Cnd	Apr Value
PAV1	PAVING-ASPI			L	58,00	1.65	2003		0		50	47,900
PAV2	PAVING-CON			L	224	3.30	2003		0		50	400
LT1	LIGHTS-IN W			L	6	760.00	2003		0		50	2,300
SPR1	SPRINKLERS-			B	21,67	1.00	2002		1		100	15,000
CLR1	COOLER			B	216	22.00	2002		1		100	3,300
CLR1	COOLER			B	528	22.00	2002		1		100	8,000
SPR2	WET/CONCE/			B	27,95	1.30	2002		1		100	25,100
SPR1	SPRINKLERS-			B	7,918	1.00	2002		1		100	5,500

BUILDING SUB-AREA SUMMARY SECTION

Code	Description	Living Area	Gross Area	Eff. Area	Unit Cost	Undeprec. Value
AOF	Office	19,095	19,095	23,869	105.55	2,015,403
BAS	First Floor	7,918	7,918	7,918	84.44	668,564
FOP	Porch, Open	0	480	96	16.89	8,106
SLB	Slab	0	27,957	0	0.00	0
SPA	Service Production Area	8,862	8,862	8,862	84.44	748,272
	Ttl. Gross Liv/Lease Area:	35,875	64,312	40,745		3,440,345

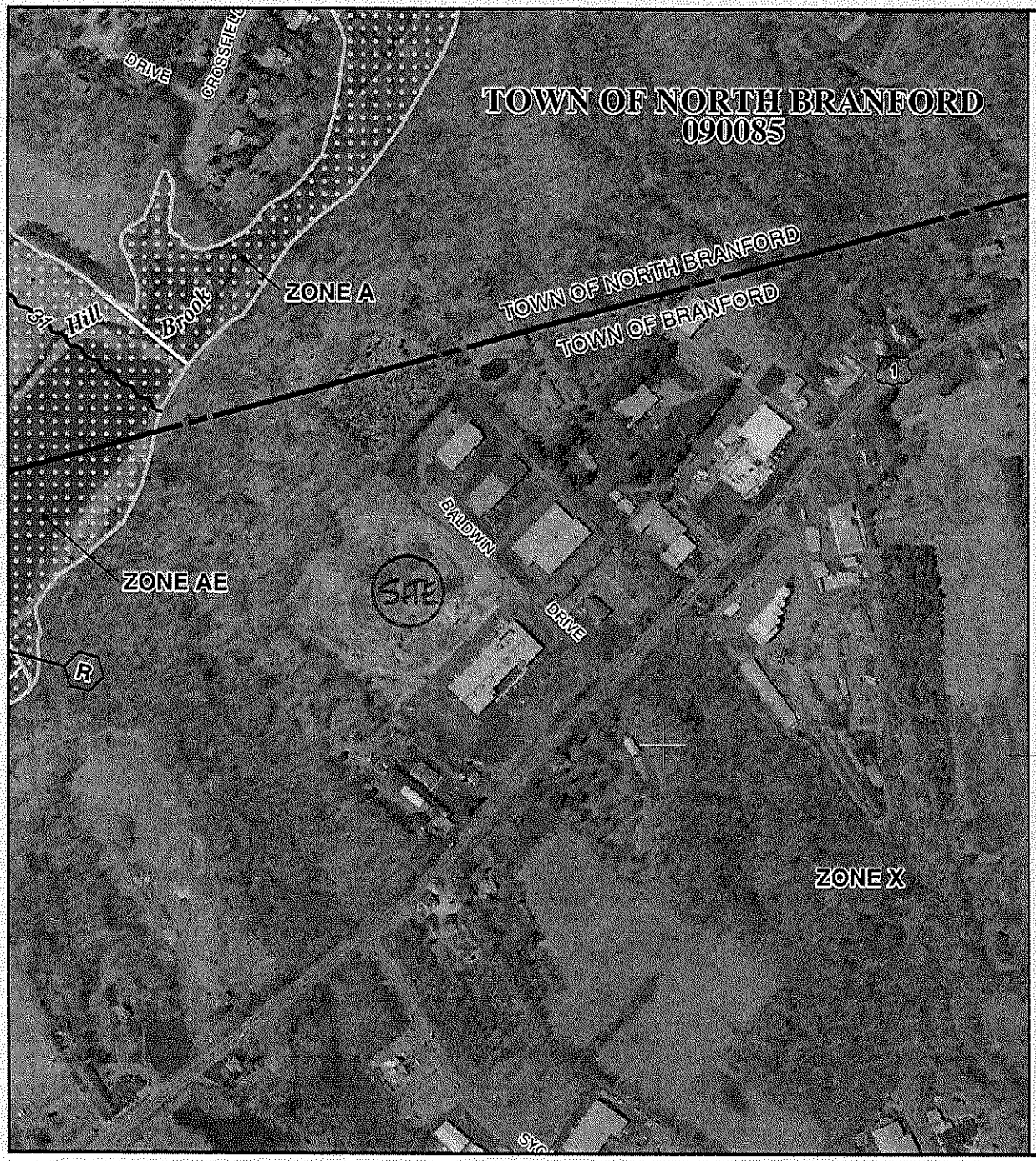

MAP SCALE 1" = 500'

250 0 500 1000 FEET

METER

NFIP

NATIONAL FLOOD INSURANCE PROGRAM

PANEL 0467H

FIRM

FLOOD INSURANCE RATE MAP

NEW HAVEN COUNTY, CONNECTICUT

(ALL JURISDICTIONS)

PANEL 467 OF 635

(SEE MAP INDEX FOR FIRM PANEL LAYOUT)

CONTAINS:

COMMUNITY	NUMBER	PANEL	SUFFIX
BRANFORD, TOWN OF	090073	0467	H
NORTH BRANFORD, TOWN OF	090085	0467	H

Notice to User: The **Map Number** shown below should be used when placing map orders; the **Community Number** shown above should be used on insurance applications for the subject community.

MAP NUMBER
09009C0467H

EFFECTIVE DATE
DECEMBER 17, 2010

Federal Emergency Management Agency

This is an official copy of a portion of the above referenced flood map. It was extracted using F-MIT On-Line. This map does not reflect changes or amendments which may have been made subsequent to the date on the title block. For the latest product information about National Flood Insurance Program flood maps check the FEMA Flood Map Store at www.msc.fema.gov

Town of Branford

Geographic Information System (GIS)

Date Printed: 10/24/2011

CONNECTED TO SEWER

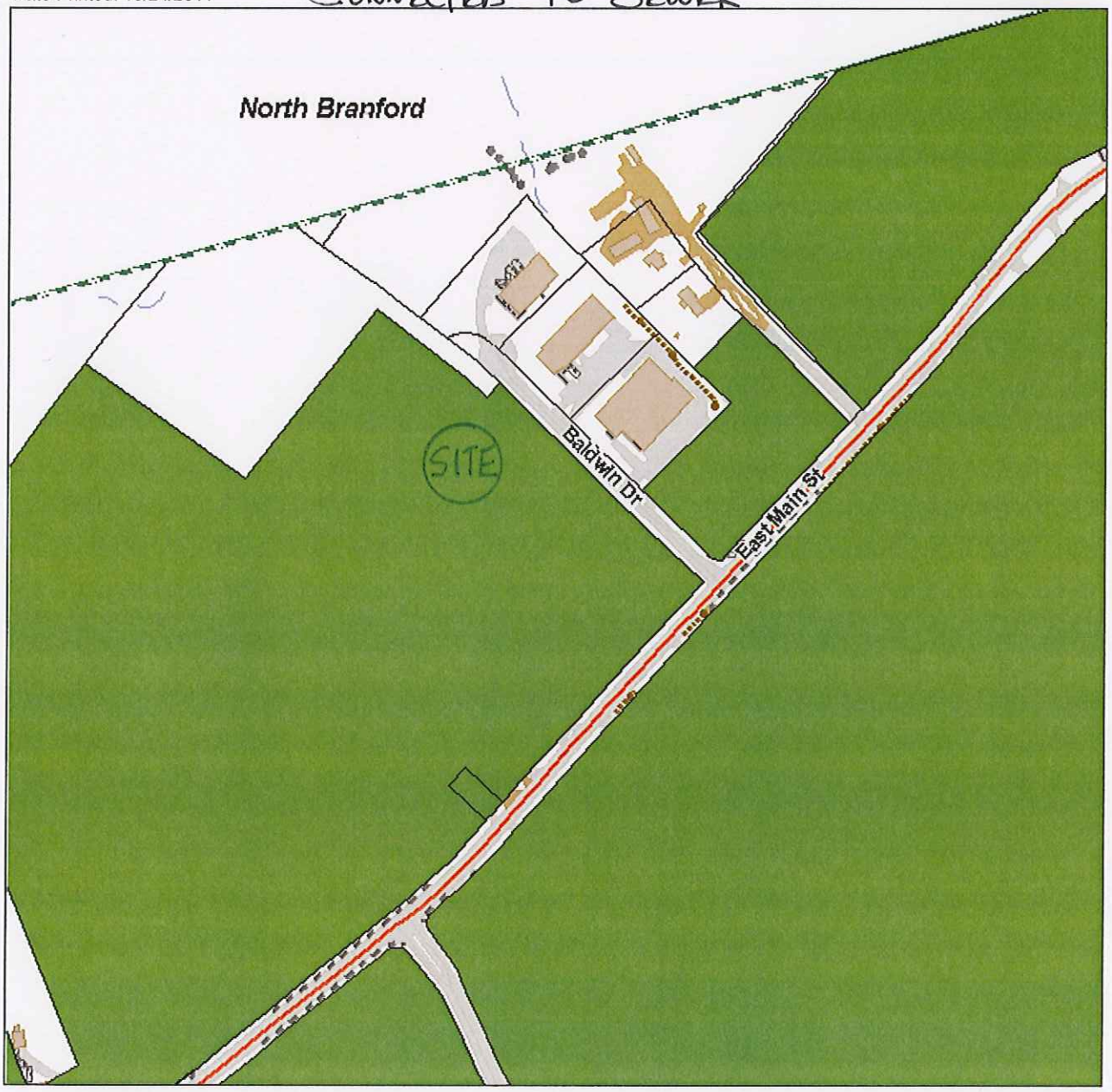

MAP DISCLAIMER - NOTICE OF LIABILITY

This map is for assessment purposes only. It is not for legal description or conveyances. All information is subject to verification by any user. The Town of Branford and its mapping contractors assume no legal responsibility for the information contained herein.

0 400 Feet

N W E S

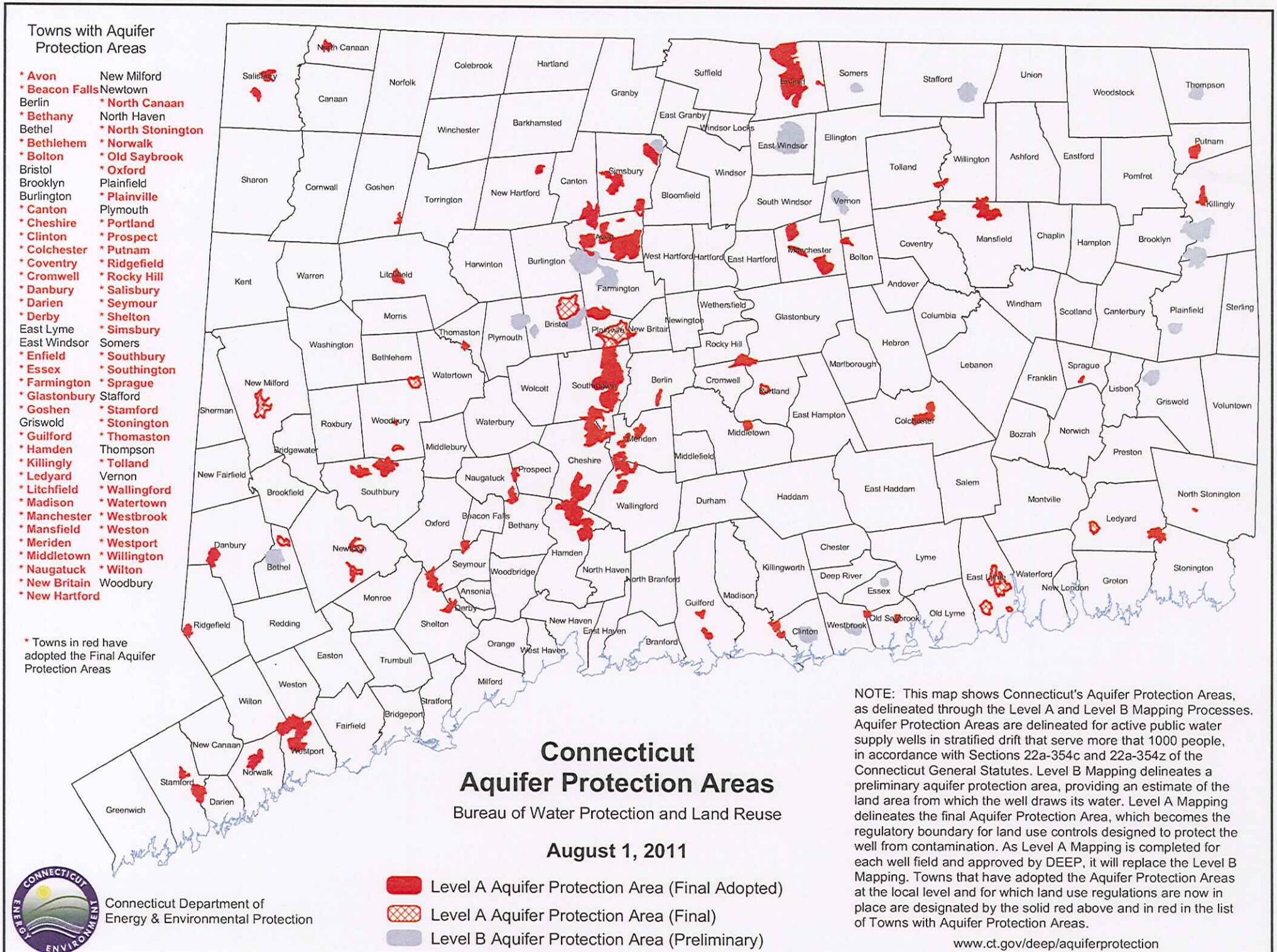
Towns with Aquifer Protection Areas
* Avon
* Beacon Falls
Berlin
* Bethany
Bethel
* Bethlehem
* Bolton
Bristol
Brooklyn
Burlington
* Canton
* Cheshire
* Clinton
* Colchester
* Coventry
* Cromwell
* Danbury
* Darien
* Derby
East Lyme
East Windsor
* Enfield
* Essex
* Farmington
* Glastonbury
* Goshen
Griswold
* Guilford
* Hamden
* Killingly
* Ledyard
* Litchfield
* Madison
* Manchester
* Mansfield
* Meriden
* Middletown
* Naugatuck
* New Britain
* New Hartford
New Milford
Newtown
* North Canaan
North Haven
* North Stonington
* Norwalk
* Old Saybrook
* Oxford
Plainfield
* Plainville
Plymouth
* Portland
* Prospect
* Putnam
* Ridgefield
* Rocky Hill
* Salisbury
* Seymour
* Shelton
* Simsbury
Somers
* Southbury
* Southington
* Sprague
Stafford
* Stamford
* Stonington
* Thomaston
Thompson
* Tolland
Vernon
* Wallingford
* Watertown
* Westbrook
* Weston
* Westport
* Willington
Wilton
Woodbury
* Towns in red have adopted the Final Aquifer Protection Areas
Connecticut
Aquifer Protection Areas
Bureau of Water Protection and Land Reuse
August 1, 2011
Level A Aquifer Protection Area (Final Adopted)
Level A Aquifer Protection Area (Final)
Level B Aquifer Protection Area (Preliminary)
NOTE: This map shows Connecticut's Aquifer Protection Areas, as delineated through the Level A and Level B Mapping Processes. Aquifer Protection Areas are delineated for active public water supply wells in stratified drift that serve more that 1000 people, in accordance with Sections 22a-354c and 22a-354z of the Connecticut General Statutes. Level B Mapping delineates a preliminary aquifer protection area, providing an estimate of the land area from which the well draws its water. Level A Mapping delineates the final Aquifer Protection Area, which becomes the regulatory boundary for land use controls designed to protect the well from contamination. As Level A Mapping is completed for each well field and approved by DEEP, it will replace the Level B Mapping. Towns that have adopted the Aquifer Protection Areas at the local level and for which land use regulations are now in place are designated by the solid red above and in red in the list of Towns with Aquifer Protection Areas.
www.ct.gov/deep/aquiferprotection
Connecticut Department of Energy & Environmental Protection
CONNECTICUT ENERGY ENVIRONMENT

Natural Diversity Data Base Areas

BRANFORD, CT

July 2011

State and Federal Listed Species & Significant Natural Communities

Town Boundary

NOTE: This map shows general locations of State and Federal Listed Species and Significant Natural Communities. Information on listed species is collected and compiled by the Natural Diversity Data Base (NDDB) from a number of data sources . Exact locations of species have been buffered to produce the general locations. Exact locations of species and communities occur somewhere in the shaded areas, not necessarily in the center.

This map is intended for use as a preliminary screening tool for conducting a Natural Diversity Data Base Review Request. To use the map, locate the project boundaries and any additional affected areas. If the project is within a shaded area; or overlapping a lake, pond or wetland that has shading; or upstream or downstream (by less than 1/2 mile) from a shaded area, the project may have a potential conflict with a listed species. For more information, complete a Request for Natural Diversity Data Base State Listed Species Review form (DEP-APP-007), and submit it to the NDDB along with the required maps and information. More detailed instructions are provided with the request form on our website.

www.ct.gov/dep/nddbrequest

This file has PDF Layers. Look for the Layers tab on the left. Expand the layers and use the "eye" icons to change visibility.

QUESTIONS: Department of Energy and Environmental Protection (DEEP)
79 Elm St., Hartford CT 06106
Phone (860) 424-3011

Connecticut Department of Energy & Environmental Protection
Bureau of Natural Resources
Wildlife Division

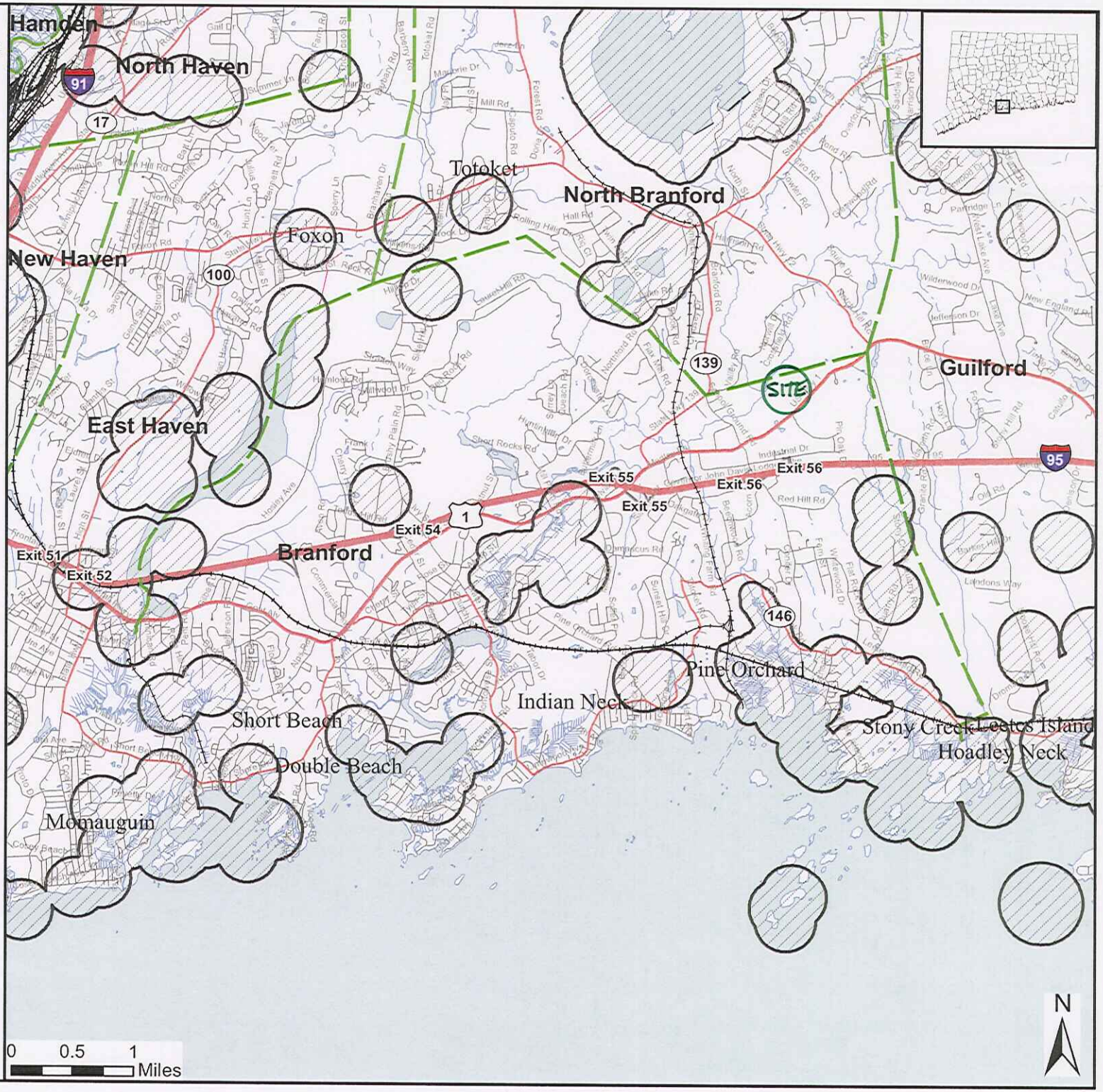

ZONING REQUIREMENTS - GENERAL INDUSTRIAL 2 (IG-2) DISTRICT								
	DESCRIPTION	REQUIRED BY ZONING			OPERATIONAL REQUIRED			
MINIMUM	LOT AREA	60,000 SF			4.9 ACRES (212,625 SF)			
	LOT AREA PER UNIT	N/A RESIDENTIAL USES NOT ALLOWED			–			
	FRONTAGE	50 FEET			405 FEET			
	SQUARE	200 FEET			–			
	SETBACKS	FRONT	SIDE	REAR	FRONT	SIDE	REAR	
		50 FEET	30 FEET	50 FEET	125 FEET	30 FEET	50 FEET	
MAXIMUM	SETBACK FROM R DISTRICT	100 FEET			–			
	HEIGHT	40 FEET			35 FEET DPW / 42 FEET SALT			
	FLOOR AREA	.40			.20 (43500 SF BUILDING)			
	LOT COVERAGE	.30			.20 (43500 SF BUILDING)			
	IMPERVIOUS SURFACE AREA RATIO	.60			.66 (128,200 SF IMP. SURFACE)			
	EFFECTIVE IMPERVIOUS SURFACE	.75			.39 (84,700 SF EFF. IMP. SURFACE)			

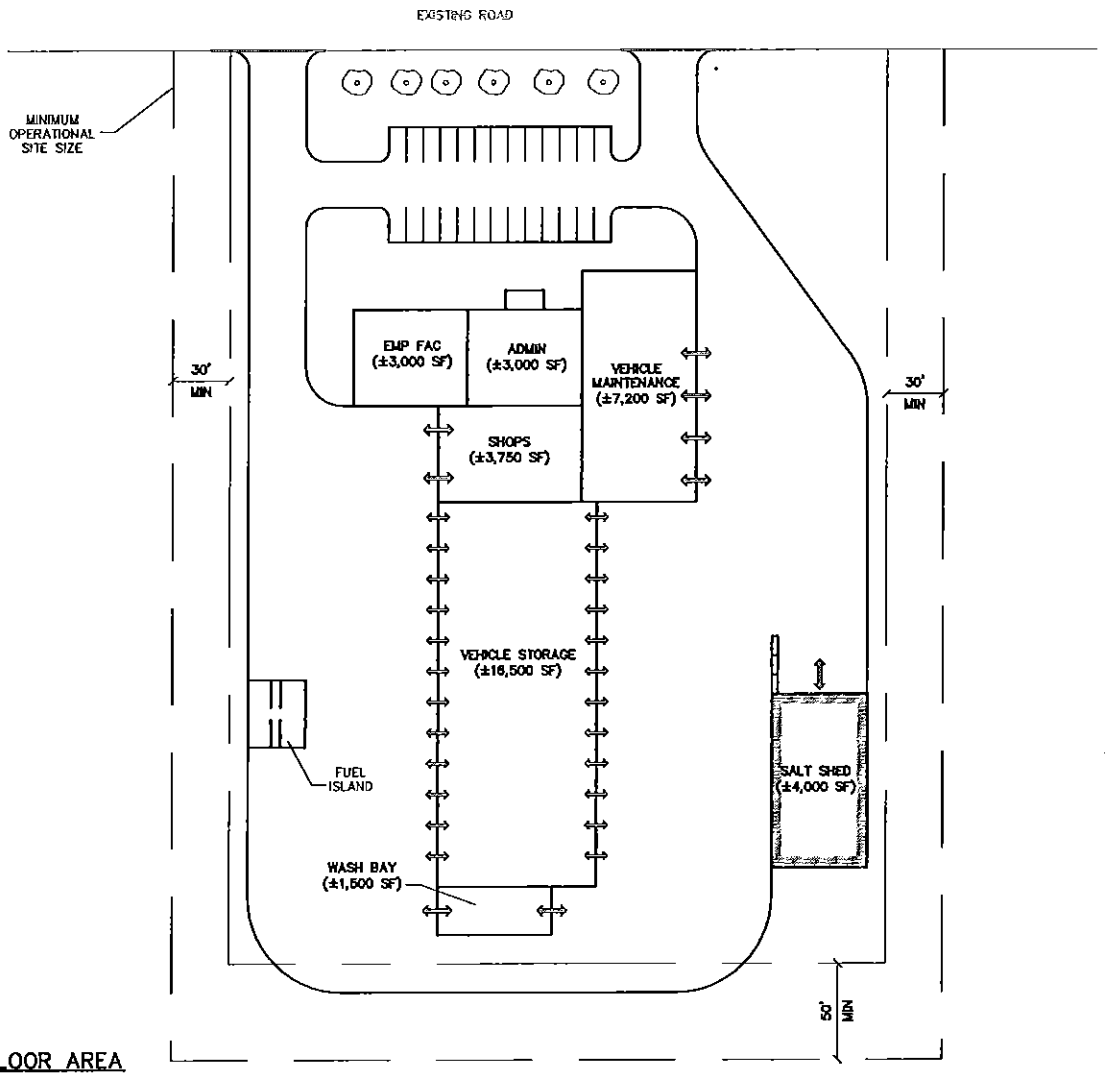

FLOOR AREA

ADMINISTRATION:	3,000 SF
EMPLOYEE FACILITIES:	3,000 SF
SHOPS:	3,750 SF
VEHICLE MAINTENANCE:	7,200 SF
VEHICLE STORAGE:	16,500 SF
WASH BAY:	1,500 SF
SUBTOTAL:	**34,950 SF**

DPW BUILDING
34,950 SF

SALT SHED:	4,000 SF
CANOPY:	3,500 SF
FUEL ISLAND:	1,050 SF
SUBTOTAL:	**8,550 SF**

TOTAL: **43,500 SF**

TOWN OF BRANFORD, CT

DEPARTMENT OF PUBLIC WORKS

MINIMUM GENERIC SITE PLAN

General Industrial 2 District (IG-2)

Scale: 1"=100'-0" *Sheet 1*

WESTON & SAMPSON ENGINEERS, INC.

Town of Branford, CT
DPW Site Selection Matrix
January 2012

Note: Maximum Score = 100

1/16/2012

Criteria	Factors	Available Points	TP-1 48-86 Tabor Drive	PP-4 20 NE Industrial Rd.
1. Property Ownership (9 Points)	Town owned parcel, no displacement of existing active/proposed use *	9	9	
	Town owned parcel, displacement of existing active/proposed use - low value replacement *	8		
	Town owned parcel, displacement of existing active/proposed use - high value replacement *	6		
	Privately owned parcel - available *	3		3
	Privately owned parcel - unknown availability *	0		
2. Location (6 Points)	Located on or near a Interstate	6		
	Located on or near a Minor Arterial	4		4
	Located on or near a Major Collector	2	2	
	Not easily accessible to any arterials	0		
3. Physical Site Features (10 points)	Condition of access roadway favorable	4		4
	Condition of access roadway poor	0	0	
	Useable area adequate (adequate future growth potential)	6	6	
	Useable area limiting (impacting future expansion capabilities)	3		3
	Useable area inadequate	0		
4. Site History (6 points)	Past use favorable	3		
	Past use potentially unfavorable	0	0	0
	No known impacted soil/groundwater concerns	3		
	Potential impacted soil/groundwater concerns	0	0	0
5. Zoning Consistency (4 points)	Allowable use	4	4	4
	Allowable use with Special Exception	2		
	Allowable use with variance and other private development restrictions	0		
6. Environmental Impacts (14 points)	No residential abutters	10		10
	Residential abutters (1 side) with adequate area for screening	7	7	
	Residential abutters (multiple sides) with adequate area for screening	3		
	Residential abutters (multiple sides) with limited area for screening	0		
	No impacts to wetland/watercourse areas	4		
	Indirect impact to wetland/watercourse areas	2	2	2
	Direct impact to wetland/watercourse areas	0		
7. Access to Utilities (8 points)	Sewer available	4	4	4
	Sewer available nearby	2		
	No sewer available	0		
	Water available	4	4	4
	Water available nearby	2		
	No water available	0		
8. Flooding (4 points)	No known flooding	4	4	
	Known flooding during heavy rain storm events	0		0
9. Traffic Impacts (5 points)	Centrally located to other Town operations - no increase in trips	5	5	
	Not centrally located to other Town operations - increase to current trip traffic	0		0
10. Operational Impacts (12 points)	No negative impacts to DPW	10	10	
	Minimal impacts to DPW	5		5
	Excessive impacts to DPW	0		
	Fuel central to Town buildings	2	2	
	Fuel not central to Town buildings	0		0
11. Cost of Site Development (16 points)	Minimal cut and/or fill	2		2
	Moderate cut and/or fill	1	1	
	Excessive cut and/or fill	0		
	No acquisition costs *	12	12	
	Minimal acquisition costs (based on acreage) *	7		
	Moderate acquisition costs (based on acreage) *	3		3
	High acquisition costs (based on acreage) *	0		
	Minimal clearing	2	2	2
	Normal clearing	1		
	Excessive clearing	0		
12. Cost of Construction (6 points)	No restrictions impacting cost	6		
	Some restrictions impacting cost	4		
	Significant restrictions impacting cost	0	0	0
	Subtotal Site Score (not including acquisition cost impacts): (* Items which impact acquisition cost)		53	44
	Total Site Score (with acquisition costs factored into analysis): *Ranking*		**74** *1*	**50** *2*

AMTRAK RAILROAD

100' REVIEW ZONE FROM WETLAND, TYP.

POND

100', TYP.

TABOR DRIVE

PROPOSED BALL FIELDS

WETLAND, TYP

100'

PROPERTY LINE

NEW ACCESS RD

NEW DPW FACILITY

N

VEHICLE MAINT

VEHICLE STORAGE

SHOPS

ADMIN

SALT

NEW TABOR DR. EXTENS. 100'

NEW FIELD

FUEL

100' RESIDENCE DISTRICT SETBACK

50' WOODED STRIP

TOWN OF BRANFORD, CT
NEW PUBLIC WORKS FACILITY

TABOR DRIVE SITE
1" = 100'-0"

OPTION 1 - 'REVISED"

AMTRAK RAILROAD

100' REVIEW ZONE FROM WETLAND, TYP.

POND

100', TYP.

TABOR DRIVE

PROPERTY LINE

WETLAND, TYP

100' SETBACK, TYP.

EXIST PATHS, TYP

NEW DPW ACCESS ROAD

NEW DPW FACILITY

FUEL

AD.

VEH. MAINT

SHOPS

EMP. FAC

VEHICLE STORAGE

MAT'L STORAGE

SALT

OUT-OF-SERVICE VEHICLES

UTILITY EASEMENT

50' WOODED STRIP

100' RESIDENCE DISTRICT SETBACK

30' WIDE EXIST ACCESS DRIVE

N

TOWN OF BRANFORD, CT
NEW PUBLIC WORKS FACILITY

TABOR DRIVE SITE
1" = 100'-0"

OPTION 2 · NORTH RD ACCESS

AMTRAK RAILROAD

100' REVIEW ZONE FROM WETLAND, TYP.

POND

100', TYP.

NEW DPW ACCESS RD.

TABOR DRIVE

PROPERTY LINE

WETLAND, TYP

100' SETBACK, TYP.

EXIST PATHS, TYP

SALT

FUEL

VEHICLE STORAGE

MAT'L STORAGE

ADM

EMP PK

SHOPS

VEHICLE MAINT

WASH

UTILITY EASEMENT

50' WOODED STRIP

100' RESIDENCE DISTRICT SETBACK

30' WIDE EXIST ACCESS DRIVE

N

TOWN OF BRANFORD, CT

NEW PUBLIC WORKS FACILITY

TABOR DRIVE SITE

1" = 100'-0"

OPTION 3

NORTH-SOUTH LOOP RD ACCESS

AMTRAK RAILROAD

100' REVIEW ZONE FROM WETLAND, TYP.

POND

TABOR DRIVE

100', TYP.

EMERGENCY DPW EXIT RD.

PROPERTY LINE

WETLAND, TYP

100' SETBACK, TYP.

EXIST PATHS, TYP

SALT

MATERIAL STORAGE

VEHICLE STORAGE

OUT-OF-SERVICE VEHICLES

SHOPS

VEHICLE MAINT.

ADMIN

EMP. PKG.

FUEL

UTILITY EASEMENT

100' RESIDENCE DISTRICT SETBACK

50' WOODED STRIP

NEW DPW ACCESS RD.

30' WIDE ACCESS DRIVE

N

TOWN OF BRANFORD, CT
NEW PUBLIC WORKS FACILITY

TABOR DRIVE SITE
1" = 100'-0"

OPTION 4:
SOUTH RD, 'BAR' SCHEME

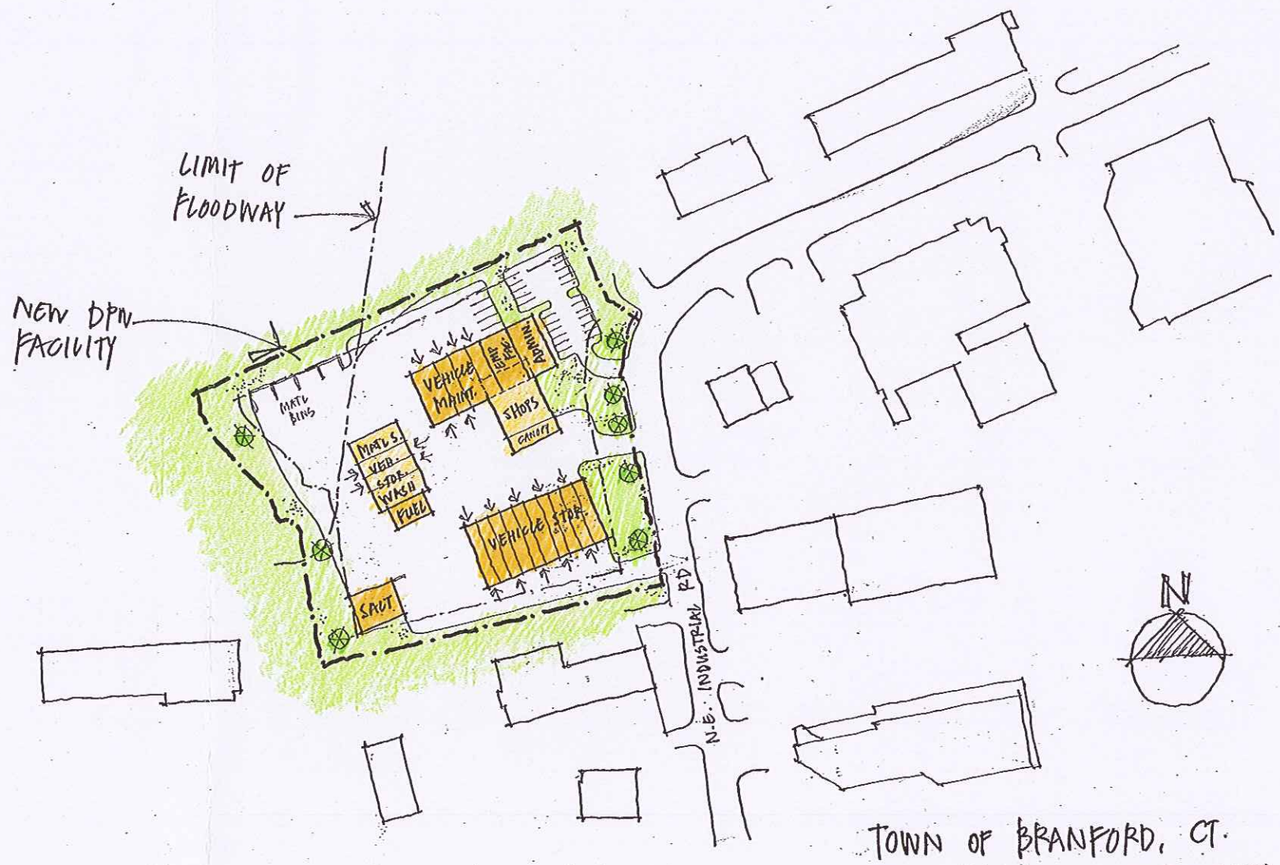

TOWN OF BRANFORD, CT.
NEW PUBLIC WORKS FACILITY
NORTH EAST INDUSTRIAL RD. SITE
OPTION 1
1" = 100'-0"

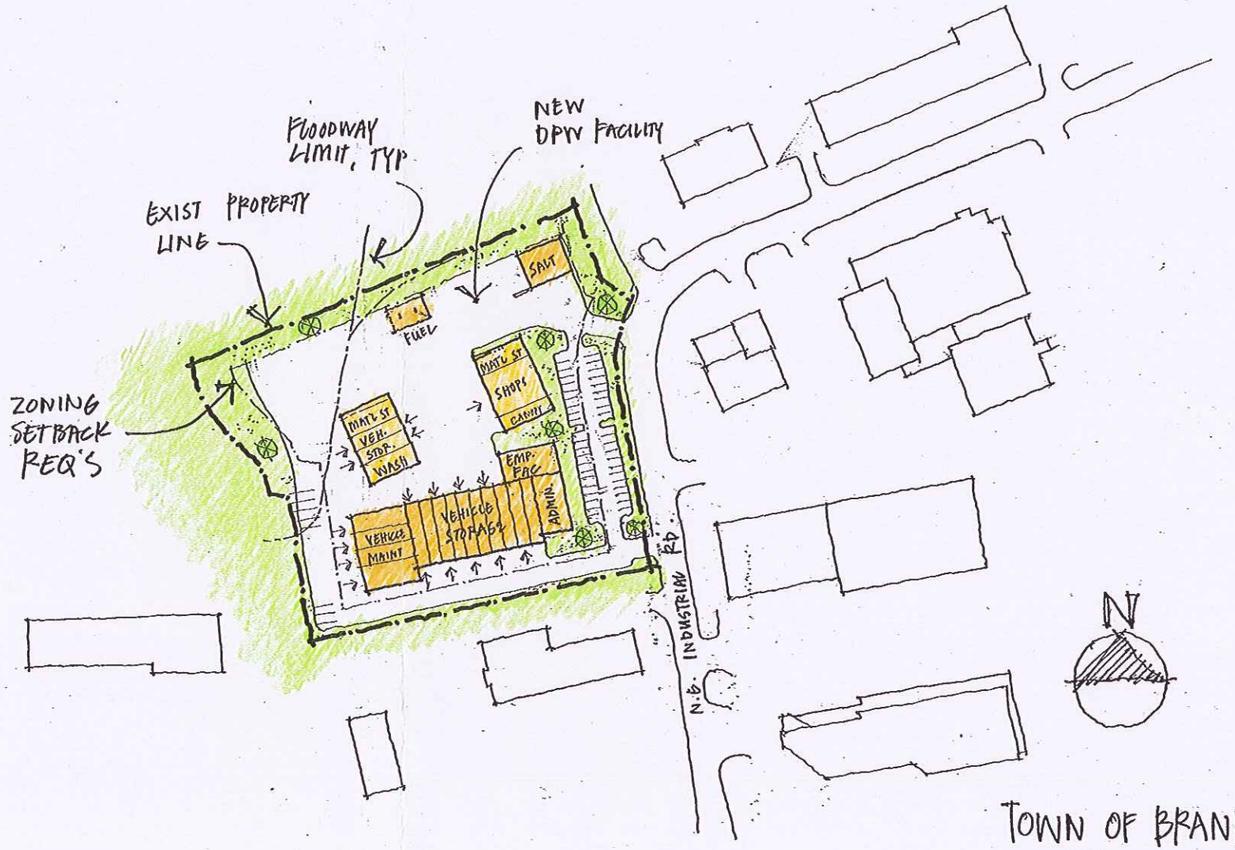

TOWN OF BRANFORD, CT
NEW PUBLIC WORKS FACILITY

NORTH EAST INDUSTRIAL RD. SITE
OPTION 2

1" = 100'-0"

Town of Branford
New Public Works Facility
Budget Total Project Cost - Tabor Site

1/16/2012

Budget Planning Work Sheet is based in bids received for the following types of facilities:			
Location & Bid Date	**Avg Cost/SF**	**(includes building, site, and equipment)**	
Town of Lexington - Bid 2007	$ 242	(High end finishes, high end equipment, average site work)	
Town of Weston - Bid 2009	$ 272	(High end finishes, high end equipment, above average site work)	
Town of Charlton - Bid 2010	$ 172	(Low end finishes, no equipment, average site work)	
Target Average Construction Cost per SF (new construction):	$ 222		

	AVERAGE FINISHES/EQUIPMENT			
New Construction Area	Size (SF)	2011 Cost/SF		Cost
Administration / Employee Facilities	5,781	$ 230	$	1,329,630
Shops	3,809	$ 190	$	723,710
Vehicle Maintenance (not including equipment)	7,371	$ 240	$	1,769,040
Wash	1,502	$ 250	$	375,500
Vehicle/Equipment Storage	17,430	$ 100	$	1,743,000
New Construction Subtotal:	**35,893**		**$**	**5,940,880**
Building Cost per SF:	166			
		Place a "x" here if included		
Industrial Equipment				
- Wash Equipment	$ 50,000	x	$	50,000
- Heavy Duty Vehicle Lift (50,000 lb capacity minimum)	$ 60,000	x	$	60,000
- Light Duty Vehicle Lift (16,000 lb capacity minimum)	$ 15,000	x	$	15,000
- Bridge Crane	$ 60,000	x	$	60,000
- Overhead Lubrication System	$ 100,000	x	$	100,000
- Storage Shelving / Benches / Racks	$ 20,000	x	$	20,000
- Exhaust Removal System	$ 20,000	x	$	20,000
Industrial Equipment Subtotal:			**$**	**325,000**
Fuel System				
- 1 - 10,000 Gallon / 1 - 5,000 Tanks	$ 60,000	x	$	60,000
- Concrete Ballast Pad	$ 20,000	x	$	20,000
- Concrete Surface Pad	$ 20,000	x	$	20,000
- Pea Stone Backfill	$ 14,000	x	$	14,000
- Dispensing System & Associated Pipe	$ 36,000	x	$	36,000
- Canopy	$ 35,000	x	$	35,000
- Fuel Management System	$ 25,000	x	$	25,000
- Installation	$ 180,000	x	$	180,000
Fuel System Subtotal:			**$**	**390,000**
Building & Equipment Total:			**$**	**6,655,880**
Mezzanines	1,200	$ 50	$	60,000
Open Canopy Storage	2,125	$ 75	$	159,375
Site Development (acres) - assumes level site with no contamination, existing structures/utilities, etc.	4.0	$ 200,000	$	800,000
Sub-Slab Vent System (below entire slab)	35,893	$ 3	$	107,679
Salt/Sand Sheds	3,000	65	$	195,000
		Subtotal Bldg, Equip, & Site:	$	7,977,934
		Design Contingency (3%):	$	239,338
		Total Construction: (2011 dollars)	**$**	**8,217,272**
		Total Construction Cost/SF:	**$**	**229**

Town of Branford
New Public Works Facility
Budget Total Project Cost - Tabor Site

1/16/2012

	AVERAGE FINISHES/EQUIPMENT		
Owner's Soft Costs			
A&E Fees (design, bid, const.)	$	757,903	(Assume 9.5% of Const. Value)
	$	113,685	Schematic Design (15%)
	$	151,581	Design Development (20%)
	$	303,161	Construction Documents (40%)
	$	37,895	Bidding (5%)
	$	151,581	Construction Administration (20%)
A&E Special Services (survey, geotechnical, permitting, etc.)	$	79,779	(Assume 1% of Const. Value)
Furnishings (FFE)	$	50,000	allowance
Communic. / Low Voltage System	$	20,000	allowance
Printing Cost - Advertisement	$	10,000	allowance
Test & Inspections During Construction	$	15,000	allowance
Construction Contingency (8%)	$	657,382	allowance
TOTAL PROJECT COST (DPW Facility) (Average Bid Price)	$	9,807,336	

Town of Branford
New Public Works Facility
Budget Total Project Cost - Tabor Site

1/16/2012

Off-Site / Shared Site Improvements				
West Site Access Road	$ 298,250		1 $	298,250
East Site Access Road	$ 298,250		1 $	298,250
West Off-Site Roadway Improvements	$ 283,060		1 $	283,060
East Off-Site Roadway Improvements	$ 62,220		1 $	62,220
	Subtotal:		$	941,780
	Design Contingency (3%):		$	28,253
A&E Fees (design, bid, const.)	$ 89,469	(Assume 9.5% of ConsL Value)		
A&E Special Services (survey, geotechnical, permitting, etc.)	$ 9,418	(Assume 1% of Const. Value)		
Construction Contingency (8%)	$ 77,603	Allowance		
	Subtotal:		$	176,490
	Total Construction:		**$**	**1,146,523**
TOTAL DPW FACILITY & OFF-SITE / SHARED SITE IMPROVEMENTS:			**$**	**10,953,859**

Notes:
1. Budget numbers assume adequate subsurface conditions for shallow foundations

BRANFORD, CT
TABOR DRIVE SITE ESTIMATE
OFF-SITE EAST ROADWAY IMPROVEMENTS
November 2011

Item No.	Unit	Item Description	Unit Price	Unit Quantity	Total
2.01	CY	Unclassified Excavation	$ 5.00	100	$ 500.00
2.02	CY	Roadway Excavation	$ 15.00	200	$ 3,000.00
2.03	CY	Gravel Borrow (raise road avg 1.5')	$ 20.00	280	$ 5,600.00
2.04	SY	Fine Grading and Compacting	$ 1.00	560	$ 560.00
2.05	CY	Loam Borrow	$ 10.00	100	$ 1,000.00
2.06	SY	Seeding	$ 1.00	900	$ 900.00
2.08	CY	Dense Graded Crushed Stone	$ 30.00	60	$ 1,800.00
2.09	TN	5" Hot Mix Asphalt	$ 85.00	156	$ 13,260.00
2.10	LF	Bit Conc Berm	$ 6.50	400	$ 2,600.00
2.11	EA	Catch Basins	$ 2,500.00	2	$ 5,000.00
2.12	EA	Drain Manholes	$ 2,500.00	1	$ 2,500.00
2.13	EA	Frame and Cover	$ 500.00	1	$ 500.00
2.14	EA	Frame and Grate	$ 500.00	2	$ 1,000.00
2.15	LF	12" HDPE Pipe	$ 40.00	100	$ 4,000.00
2.17	SF	Segmental Retaining Wall	$ 25.00	800	$ 20,000.00

Project Total = **$ 62,220.00**

BRANFORD, CT
TABOR DRIVE SITE ESTIMATE
OFF-SITE WEST ROADWAY IMPROVEMENTS
November 2011

Item No.	Unit	Item Description	Unit Price	Unit Quantity	Total
2.01	CY	Unclassified Excavation	$ 5.00	210	$ 1,050.00
2.02	CY	Roadway Excavation	$ 15.00	420	$ 6,300.00
2.03	CY	Gravel Borrow (raise road 2')	$ 20.00	833	$ 16,660.00
2.04	SY	Fine Grading and Compacting	$ 1.00	1250	$ 1,250.00
2.05	CY	Loam Borrow	$ 10.00	50	$ 500.00
2.06	SY	Seeding	$ 1.00	500	$ 500.00
2.07	LS	Temp Provisions During Construction	$ 50,000.00	1	$ 50,000.00
2.08	CY	Dense Graded Crushed Stone	$ 30.00	140	$ 4,200.00
2.09	TN	5" Hot Mix Asphalt	$ 85.00	350	$ 29,750.00
2.10	LF	Bit Conc Berm	$ 6.50	900	$ 5,850.00
2.11	EA	Catch Basins	$ 2,500.00	4	$ 10,000.00
2.12	EA	Drain Manholes	$ 2,500.00	2	$ 5,000.00
2.13	EA	Frame and Cover	$ 500.00	2	$ 1,000.00
2.14	EA	Frame and Grate	$ 500.00	4	$ 2,000.00
2.15	LF	12" HDPE Pipe	$ 40.00	100	$ 4,000.00
2.16	LS	Culvert	$ 85,000.00	1	$ 85,000.00
2.17	SF	Segmental Retaining Wall	$ 25.00	2400	$ 60,000.00

Project Total = **$ 283,060.00**

BRANFORD, CT
TABOR DRIVE SITE ESTIMATE
ACCESS ROAD COST
November 2011

Item No.	Unit	Item Description	Unit Price	Unit Quantity	Total
2.04	CY	Unclassified Excavation	$ 5.00	1640	$ 8,200.00
2.05	AC	Clearing and Grubbing	$ 8,000.00	1.2	$ 9,600.00
2.06	CY	Gravel Borrow	$ 20.00	1200	$ 24,000.00
2.07	SY	Fine Grading and Compacting	$ 1.00	7000	$ 7,000.00
2.08	CY	Loam Borrow	$ 10.00	340	$ 3,400.00
2.09	SY	Seeding	$ 1.00	2050	$ 2,050.00
2.10	LS	Dewatering	$ 2,000.00	1	$ 2,000.00
2.11	CY	Dense Graded Crushed Stone	$ 30.00	570	$ 17,100.00
2.12	TN	5" Hot Mix Asphalt	$ 85.00	1500	$ 127,500.00
2.14	LF	Bit Conc Berm	$ 6.50	3600	$ 23,400.00
2.31	EA	Catch Basins	$ 2,500.00	5	$ 12,500.00
2.32	EA	Drain Manholes	$ 2,500.00	3	$ 7,500.00
2.36	EA	Frame and Cover	$ 500.00	3	$ 1,500.00
2.37	EA	Frame and Grate	$ 500.00	5	$ 2,500.00
2.39	LF	12" HDPE Pipe	$ 40.00	800	$ 32,000.00
2.40	LF	15" HDPE Pipe	$ 45.00	400	$ 18,000.00

Project Total = **$ 298,250.00**

Note: This estimate is for approx 1800 LF of a 26' wide roadway. A total of two (2) access roads of 1800 LF each are required.

Town of Branford
New Public Works Facility
Budget Total Project Cost - North East Industrial Road

1/16/2012

Budget Planning Work Sheet is based in bids received for the following types of facilities:

Location & Bid Date	Avg Cost/SF	(Includes building, site, and equipment)
Town of Lexington - Bid 2007	$ 242	(High end finishes, high end equipment, average site work)
Town of Weston - Bid 2009	$ 272	(High end finishes, high end equipment, above average site work)
Town of Charlton - Bid 2010	$ 172	(Low end finishes, no equipment, average site work)
Target Average Construction Cost per SF (new construction):	$ 222	

	AVERAGE FINISHES/EQUIPMENT			
New Construction Area	Size (SF)	2011 Cost/SF		Cost
Administration / Employee Facilities	5,781	$ 230	$	1,329,630
Shops	-	$ 190	$	-
Vehicle Maintenance (not including equipment)	7,371	$ 240	$	1,769,040
Wash	-	$ 250	$	-
Vehicle/Equipment Storage	13,510	$ 100	$	1,351,000
New Construction Subtotal:	**26,662**		$	**4,449,670**
Building Cost per SF:	167			
Renovation				
Non-Programmatic Code Required Upgrades	-	Allowance		100,000
Shops Renovation (clean/h&v/elec/walls)	4,480	$ 60		268,800
Material Storage Renovation (clean/h&v/elec/walls)	2,730	$ 40		109,200
Vehicle/Equipment Storage Renovation (clean/h&v/elec)	3,920	$ 30		117,600
Wash Bay Renovations (clean/h&v/elec/walls)	1,400	$ 80		112,000
Renovation Subtotal:	**12,530**			**707,600**
		Place a "x" here if included		
Industrial Equipment				
- Wash Equipment	$ 50,000	x	$	50,000
- Heavy Duty Vehicle Lift (50,000 lb capacity minimum)	$ 60,000	x	$	60,000
- Light Duty Vehicle Lift (16,000 lb capacity minimum)	$ 15,000	x	$	15,000
- Bridge Crane	$ 60,000	x	$	60,000
- Overhead Lubrication System	$ 100,000	x	$	100,000
- Storage Shelving / Benches / Racks	$ 20,000	x	$	20,000
- Exhaust Removal System	$ 20,000	x	$	20,000
Industrial Equipment Subtotal:			$	**325,000**
Fuel System				
- 1 - 10,000 / 1 - 5,000 Gallon Tanks	$ 60,000	x	$	60,000
- Concrete Ballast Pad	$ 20,000	x	$	20,000
- Concrete Surface Pad	$ 20,000	x	$	20,000
- Pea Stone Backfill	$ 14,000	x	$	14,000
- Dispensing System & Associated Pipe	$ 36,000	x	$	36,000
- Canopy	$ 35,000	x	$	35,000
- Fuel Management System	$ 25,000	x	$	25,000
- Installation	$ 180,000	x	$	180,000
Fuel System Subtotal:			$	**390,000**
Building & Equipment Total:			$	**5,872,270**

Town of Branford
New Public Works Facility
Budget Total Project Cost - North East Industrial Road

1/16/2012

Mezzanines	1,200	$ 50	$	60,000
Open Canopy Storage	2,125	$ 75	$	159,375
Site Development (acres) - assumes level site with no contamination, existing structures/utilities, etc.	4.0	$ 200,000	$	800,000
Sub-Slab Vent System (below entire slab - new)	26,662	$ 3	$	79,986
Sub-Slab Vent System (below slab - existing)	12,530	$ 2	$	25,060
Salt/Sand Sheds	3,000	65	$	195,000
		Subtotal Bldg, Equip, & Site:	$	7,191,691
		Design Contingency (3%):	$	215,751
		Total Construction: (2011 dollars)	**$**	**7,407,442**
		Total Construction Cost/SF:	**$**	**189**

AVERAGE FINISHES/EQUIPMENT

Owner's Soft Costs		
Site Acquisition Costs	$ 1,250,000	
A&E Fees (design, bid, const.)	$ 683,210	(Assume 9.5% of Const. Value)
	$ 102,481	Schematic Design (15%)
	$ 136,642	Design Development (20%)
	$ 273,284	Construction Documents (40%)
	$ 34,160	Bidding (5%)
	$ 136,642	Construction Administration (20%)
A&E Special Services (survey, geotechnical, permitting, etc.)	$ 71,917	(Assume 1% of Const. Value)
Furnishings (FFE)	$ 50,000	allowance
Communic. / Low Voltage System	$ 20,000	allowance
Printing Cost - Advertisement	$ 10,000	allowance
Hazardous Material Abatement (Building)	$ 25,000	allowance
Test & Inspections During Construction	$ 15,000	allowance
Construction Contingency (8%)	$ 592,595	allowance
TOTAL PROJECT COST (Average Bid Price)	**$ 10,125,164**	

Allowances to Address Potential Contamination	Quantity	Unit Price		
Disposal of Contaminated Soil (foundation excavation)	4,500 tons	$ 60	$	270,000
A&E Fees			$	25,650
Construction Contingency (8%)			$	23,652
		Total:	$	319,302

Notes:
1. Budget numbers assume adequate subsurface conditions for shallow foundations