APPENDIX B
FIGURE KEY

CONSTRUCTION PLANS

- for -

WASTEWATER TREATMENT FACILITY

Branford, CT

FEBRUARY 1999

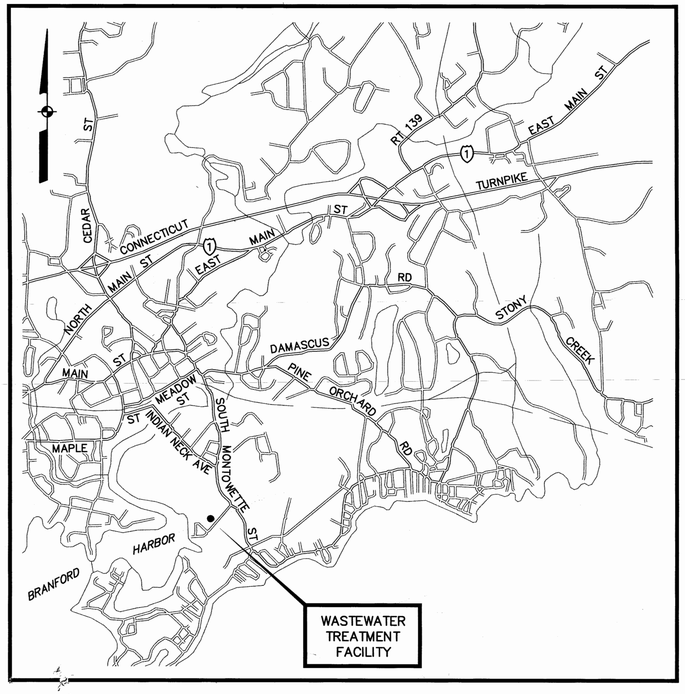

LOCUS

GENERAL NOTES

LOCATIONS OF ALL UTILITIES AND SUB-SURFACE STRUCTURES ARE FROM SURVEY AND RECORDS OF TOWN, CORPORATIONS, ETC., AND ARE CONSIDERED APPROXIMATE BOTH AS TO SIZE AND LOCATION AND ARE INDICATED ON THESE DRAWINGS TO GIVE BIDDERS A GENERAL IDEA OF EXISTING CONDITIONS TO BE INVESTIGATED BY THE BIDDER. IT IS UNDERSTOOD AND AGREED THAT EACH BIDDER WILL NOT RELY UPON THESE DRAWINGS FOR SUCH INFORMATION, BUT THAT EACH BIDDER SHALL MAKE EXAMINATIONS IN THE FIELD BY VARIOUS AVAILABLE METHODS AND SHALL OBTAIN INFORMATION FROM UTILITY CORPORATIONS AND INDIVIDUALS AS TO THE LOCATION OF ALL SUB-SURFACE STRUCTURES.

ALL ELEVATIONS REFER TO NATIONAL GEODETIC VERTICAL DATUM OF 1929.

EARTH TECH

655 Winding Brook Drive Glastonbury, Ct.

RECORD PLAN
CONTRACT NO. 31

L:\work\39603\CAD\05 BUILT\MISC\Civil.rep, Model, 02/02/2004 03:34:55 PM, adam.mcelle, 1:1

DRAWING NO.	TITLE	SHEET NO.
	GENERAL	
	COVER	1
	INDEX	2
	SITE	
LA–1	EXISTING CONDITIONS PLAN	3
LA–2	EXISTING CONDITIONS PLAN	4
LA–3	PHASE I DEMOLITION PLAN	5
LA–4	LAYOUT & MATERIALS PLAN	6
LA–5	LAYOUT & MATERIALS PLAN	7
LA–6	GRADING, DRAINAGE AND SUBDRAINAGE PLAN	8
LA–7	GRADING, DRAINAGE AND SUBDRAINAGE PLAN	9
LA–8	OUTSIDE PIPING PLAN	10
LA–9	OUTSIDE PIPING PLAN	11
LA–10	SEWER AUGMENTATION PLAN & PROFILE	12
LA–11	JUNCTION CHAMBERS NO.2 AND NO.3/NO.4	13
LA–12	SOIL EROSION CONTROL PLAN	14
LA–13	SOIL EROSION CONTROL PLAN	15
LA–14	PLANTING PLAN	16
LA–15	PLANTING PLAN	17
LA–16	SITE DETAILS	18
LA–17	SITE DETAILS	19
	ARCHITECTURAL	
A–1	SYMBOLS, ABBREVIATIONS, AND LEGEND	20
A–2	ROOM FINISH SHEDULE	21
1A–1	ADMINISTRATION BUILDING–PLANS	22
1A–2	ADMINISTRATION BUILDING–ELEVATIONS	23
1A–3	ADMINISTRATION BUILDING–WALL SECTIONS	24
2A–1	PRETREATMENT AND PUMP BUILDING–FLOOR PLANS	25
2A–2	PRETREATMENT AND PUMP BUILDING–ELEVATIONS	26
2A–3	PRETREATMENT AND PUMP BUILDING–WALL SECTIONS	27
6A–1	SECONDARY PROCESS BUILDING BASEMENT AND FIRST FLOOR PLANS	28
6A–2	SECONDARY PROCESS BUILDING BUILDING ELEVATIONS AND SECTIONS	29
6A–3	SECONDARY PROCESS BUILDING–WALL SECTIONS	30
7A–1	SOLIDS PROCESSING–DEMOLITION PLANS	31
7A–2	SOLIDS PROCESSING–BASEMENT FLOOR PLAN	32
7A–3	SOLIDS PROCESSING–FIRST FLOOR PLAN	33
7A–4	SOLIDS PROCESSING–PLAN DETAILS	34
7A–5	SOLIDS PROCESSING–ELEVATIONS	35
7A–6	SOLIDS PROCESSING–REFLECTED CEILING PLAN	36
8A–1	TRUCK LOADING–FLOOR PLAN AND ELEVATIONS	37
8A–2	TRUCK LOADING–WALL SECTIONS AND DETAILS	38
9A–1	SLUDGE HOLDING TANKS AND GALLERY–DEMOLITION	39
9A–2	SLUDGE HOLDING TANKS AND GALLERY	40
9A–3	SLUDGE HOLDING TANKS AND GALLERY	41
11A–1	EXISTING GARAGE	42
GA–1	DOOR SCHEDULE AND DETAILS	43
GA–2	DOOR DETAILS I	44
GA–3	DOOR DETAILS II	45
GA–4	WINDOW DETAILS	46
GA–5	LOUVER DETAILS	47
GA–6	MISCELLANEOUS DETAILS	48
GA–7	STAIR DETAILS	49
GA–8	ROOF DETAILS	50
GA–9	MISCELLANEOUS DETAILS	51
GA–10	MISCELLANEOUS DETAILS	52
	STRUCTURAL	
1S–1	ADMINISTRATION BUILDING PLANS, SECTIONS AND DETAILS	53
2S–1	PRETREATMENT AND PUMP BUILDING FOUNDATION PLAN AT EL. 90.00 AND DETAILS	54
2S–2	PRETREATMENT AND PUMP BUILDING FOUNDATION PLAN AT EL. 109.00 AND DETAILS	55
2S–3	PRETREATMENT AND PUMP BUILDING GROUND FLOOR AT EL. 113.00	56
2S–4	PRETREATMENT AND PUMP BUILDING ROOF PLAN, SECTIONS AND DETAILS	57
2S–5	PRETREATMENT AND PUMP BUILDING–SECTIONS AND DETAILS	58
2S–6	PRETREATMENT AND PUMP BUILDING–SECTIONS AND DETAILS	59
3S–1	PRIMARY SETTLING TANKS	60
4S–1	SECONDARY PROCESS TANKS–FOUNDATION PLAN	61
4S–2	SECONDARY PROCESS TANKS–GENERAL PLAN	62
4S–3	SECONDARY PROCESS TANKS–SECTIONS	63
4S–4	SECONDARY PROCESS TANKS–SECTIONS	64
4S–5	DISTRIBUTION BOX NO.1–PLANS AND SECTIONS	65
5S–1	SECONDARY CLARIFIERS	66
6S–1	SECONDARY PROCESS BUILDING FOUNDATION PLAN AT EL. 99.50 AND DETAILS	67
6S–2	SECONDARY PROCESS BUILDING GROUND FLOOR PLAN AT EL. 113.50 AND DETAILS	68
6S–3	SECONDARY PROCESS BUILDING HIGH ROOF FRAMING PLAN AND SECTIONS	69
7S–1	SOLIDS PROCESSING BUILDING PART PLAN, SECTIONS AND DETAILS	70
8S–1	TRUCK LOADING–FOUNDATION AND GROUND FLOOR PLAN, SECTIONS AND DETAILS	71
MS–1	MISCELLANEOUS STRUCTURES	72
GS–1	TYPICAL STRUCTURAL DETAILS	73
	MECHANICAL	
M–1	ABBREVIATIONS AND SYMBOLS	74
M–2	MAIN PROCESS FLOW SCHEMATIC	75
M–3	HYDRAULIC PROFILE	76
2M–1	PRETREATMENT AND PUMP BUILDING–PLANS AND SECTIONS	77
2M–2	PRETREATMENT AND PUMP BUILDING–PLANS AND SECTIONS	78
2M–3	PRETREATMENT AND PUMP BUILDING–PLANS AND SECTIONS	79
3M–1	PRIMARY SETTLING TANKS–PLANS, SECTIONS AND DETAILS	80
4M–1	SECONDARY PROCESS TANKS	81
4M–2	SECONDARY PROCESS TANKS–SECTIONS AND DETAILS	82
4M–3	SECONDARY PROCESS TANKS–SECTIONS AND DETAILS	83
5M–1	SECONDARY SETTLING TANKS–PLANS, SECTIONS AND DETAILS	84
6M–1	SECONDARY PROCESS BUILDING–BASEMENT PLAN	85
6M–2	SECONDARY PROCESS BUILDING–FIRST FLOOR PLAN	86
6M–3	SECONDARY PROCESS BUILDING–SECTIONS	87
6M–4	SECONDARY PROCESS BUILDING–SECTIONS	88
7M–1	PROCESS BUILDING–BASEMENT PLAN	89
7M–2	PROCESS BUILDING–FIRST FLOOR PLAN	90
7M–3	PROCESS BUILDING–SECTIONS AND SCHEMATIC	91
7M–4	SOLIDS PROCESS BUILDING–SCHEMATICS & DETAILS	92
8M–1	TRUCK LOADING–PLANS AND SECTIONS	93
9M–1	GALLERY AND SLUDGE STORAGE BUILDING–DEMOLITION PLAN	94
9M–2	GALLERY AND SLUDGE STORAGE BUILDING–DEMOLITION PLAN	95
9M–3	GALLERY AND SLUDGE STORAGE BUILDING–PLANS AND SECTIONS	96
9M–4	GALLERY AND SLUDGE STORAGE BUILDING–SECTIONS	97
9M–5	GALLERY AND SLUDGE STORAGE BUILDING–SECTIONS	98
9M–6	GALLERY AND SLUDGE STORAGE BUILDING TANK PLAN AND SECTION	99
10M–1	GRAVITY THICKENER–PLANS AND SECTIONS	100
GM–1	GENERAL MECHANICAL–SCHEDULES AND DETAILS	101
GM–2	GENERAL MECHANICAL–DETAILS	102
GM–3	GENERAL MECHANICAL–PUMPING STATIONS	103
	HVAC	
1H–1	ADMINISTRATION BUILDING–HVAC PLANS	104
2H–1	PRETREATMENT & PUMP BLDG–H&V	105
2H–2	PRETREATMENT & PUMP BLDG–H&V	106
6H–1	SECONDARY PROCESS BUILDING–H&V	107
6H–2	SECONDARY PROCESS BUILDING–H&V	108
7H–1	SOLIDS PROCESSING–H&V PLANS	109
7H–2	SOLIDS PROCESSING–H&V PLANS	110
8H–1	TRUCK LOADING–H&V PLANS	111
9H–1	SLUDGE HOLDING TANKS AND GALLERY	112
GH–1	MECHANICAL SCHEDULES & NOTES	113
GH–2	MECHANICAL DETAILS, LEGEND & NOTES	114
	PLUMBING	
1P–1	ADMINISTRATION BUILDING–PLUMBING	115
2P–1	PRETREATMENT & PUMP BLDG–PLUMBING AND FIRE PROTECTION	116
2P–2	PRETREATMENT & PUMP BLDG–PLUMBING AND FIRE PROTECTION	117
6P–1	SECONDARY PROCESS BLDG–PLUMBING	118
6P–2	SECONDARY PROCESS BLDG–PLUMBING	119
7P–1	SOLIDS PROCESSING–PLUMBING PLANS	120
7P–2	SOLIDS PROCESSING–PLUMBING PLANS	121
8P–1	TRUCK LOADING–PLUMBING PLANS	122
9P–1	GALLERY AND SLUDGE STORAGE BUILDING	123
GP–1	PLUMBING SCHEDULES, NOTES & DETAILS	124
GP–2	FIRE PROTECTION, NOTES & DETAILS	125
	INSTRUMENTATION	
I–1	INSTRUMENTATION LEGEND, SYMBOLS & NOTES	126
I–2	INSTRUMENTATION SCHEMATIC, PANEL LAYOUTS & NOTES	127
I–3	TREATMENT & DISINFECTION PROCESS SCHEMATIC	128
I–4	SECONDARY TREATMENT & DISINFECTION PROCESS SCHEMATIC	129
I–5	SOLIDS PROCESS SCHEMATIC	130
I–6	LOOP DIAGRAMS – SEE INSTRUMENTATION/SCADA SYSTEM	—
I–7	SUPPLIER DETAILED LOOP "AS BUILT" DIAGRAMS	—
I–8		—
I–9		—
I–10		—
I–11		—
I–12		—
	ELECTRICAL	
E–1	LEGEND	138
E–2	EXISTING SINGLE LINE DIAGRAM & PLANS	139
E–3	SINGLE LINE DIAGRAM, SWITCHBOARD AND MCC ELEVATION	140
E–4	SINGLE LINE DIAGRAM AND MCC ELEVATION	141
E–5	SINGLE LINE DIAGRAM AND MCC ELEVATION	142
E–6	CONTROL SCHEMATIC DIAGRAMS	143
E–7	CONTROL SCHEMATIC DIAGRAMS	144
E–8	CONTROL SCHEMATIC DIAGRAMS	145
E–9	BLOCK WIRING DIAGRAMS	146
E–10	RISER DIAGRAMS	147
E–11	RISER DIAGRAMS	148
E–12	SITE PLAN	149
E–13	CONDUIT AND WIRE SCHEDULES	150
E–14	SCHEDULES	151
E–15	PANEL SCHEDULES AND MISCELLANEOUS DETAILS	152
1E–1	ADMINISTRATION BUILDING LIGHTING AND SMALL POWER PLAN	153
2E–1	PRETREATMENT AND PUMP BUILDING GROUND FLOOR POWER PLAN–EL.113.0	154
2E–2	PRETREATMENT AND PUMP BUILDING–POWER PLAN–EL.90.0	155
2E–3	PRETREATMENT AND PUMP BUILDING LIGHTING AND SMALL POWER PLAN–EL.113.0–GROUND FLOOR	156
2E–4	PRETREATMENT AND PUMP BUILDING LIGHTING AND SMALL POWER PLAN–EL.90.0	157
3/5/10E–1	SITE STRUCTURES–LIGHTING AND POWER PLAN	158
4E–1	AERATION TANKS–POWER PLAN	159
6E–1	SECONDARY PROCESS BUILDING POWER PLANS–EL.113.50 (FIRST FLOOR) & EL. 122.0	160
6E–2	SECONDARY PROCESS BUILDING–BASEMENT POWER PLAN	161
6E–3	SECONDARY PROCESS BUILDING FIRST FLOOR–LIGHTING AND SMALL POWER PLAN	162
6E–4	SECONDARY PROCESS BUILDING BASEMENT– LIGHTING AND SMALL POWER PLAN	163
7E–1	SOLIDS PROCESSING BUILDING–FIRST FLOOR POWER PLAN	164
7E–2	SOLIDS PROCESSING BUILDING–BASEMENT POWER PLAN	165
7E–3	SOLIDS PROCESSING BUILDING FIRST FLOOR–LIGHTING AND SMALL POWER PLANS	166
7E–4	SOLIDS PROCESSING BUILDING–BASEMENT LIGHTING PLAN	167
8E–1	TRUCK LOAD BAY–PLAN	168
9/11E–1	GENERATOR ROOM, GALLERY AND DIGESTER BUILDING POWER AND LIGHTING PLANS	169

RECORD PLAN

EARTH TECH
655 Winding Brook Drive Glastonbury, Ct. 06033-4337 (860) 657-1200

NO.	REVISIONS	BY	DATE
1	REVISED TO RECORD PLAN	JPR	11/02

BRANFORD, CT

WASTEWATER TREATMENT FACILITY

INDEX

DESIGNED BY	DWG SCALE 1
DRAWN BY JZaniboni	CONTRACT NO. 31
CHECKED BY	DATE FEB. 1999

PLOT DATE 05-05-99 PLOT SCALE 1
FILENAME 21871ind.dwg
L:\work\396037\CADAS BUILTS\WSC\INDEX.dwg, Model, 02/02/20pm 02:35:59 PM, dsam-mdfin, 1:1

ABBREVIATIONS AND SYMBOLS

ABBREVIATION	SYMBOLS: LESS THAN 4 INCHES	SYMBOLS: 4 INCHES & GREATER	DESCRIPTION
BP.V.			BACKPRESSURE VALVE
B. EL.			BASE ELBOW
B.V.			BALL VALVE
B.C.V.			BALL CHECK VALVE
BF.V.			BUTTERFLY VALVE
BL.FLG.			BLIND FLANGE
C.L.			CENTER LINE
C.O.V.			CYLINDER OPERATED VALVE
C.V.			CHECK VALVE
D.V.			DIAPHRAGM VALVE
ECC.RED.			ECCENTRIC REDUCER
EL.			ELBOW
F.HYD.			FIRE HYDRANT
F.D.			FLOOR DRAIN
FLG. & FL.			FLANGE AND FLARE
FLEX. CPLG.			FLEXIBLE COUPLING
G.V.			GATE VALVE
GL.V.			GLOBE VALVE
H.B.			HOSE BIB
H.C.			HOSE CONNECTION
H.W.			HAND WHEEL
K.V.			KNIFE VALVE
LAT.			LATERAL
M.H.			MANHOLE
M.O.V.			MOTOR OPERATED VALVE
M.F.M.			MAGNETIC FLOW METER
P.R.V.			PRESSURE (REDUCING/REGULATING) VALVE
P.V.			PLUG VALVE
PNEU.			PNEUMATIC OPERATED VALVE
RED.			CONCENTRIC REDUCER
RM.			ROTAMETER
S.OPER.			SOLENOID OPERATED
TEE			TEE
T.V.			THROTTLE VALVE
3-WAY PV			THREE WAY PLUG VALVE
Y.HYD.			YARD HYDRANT

ABBREVIATIONS

ABBREVIATION	DESCRIPTION
AD	AIR DUCT
AFF	ABOVE FINISHED FLOOR
AI	AIR INTAKE
AL.	ALUMINUM
C.FLG.	COMPANION FLANGE
CHEM.	CHEMICAL
CHLOR. DIFF.	CHLORINE DIFFUSER
CPB	CHLORINE PULL BOX
CPLG.	COUPLING
CONC.	CONCRETE
C.O.	CLEAN OUT
CHLOR.V	CHLORINE VACUUM
CSK.	COUNTERSUNK
DIA.	DIAMETER
DISCH.	DISCHARGE
D & T	DRILL AND TAP
ELEV.	ELEVATION
EQUIP.	EQUIPMENT
EXP.	EXPANSION
FIN. GR.	FINISHED GRADE
FL. EL.	FLOOR ELEVATION
FIN. FL. EL.	FINISHED FLOOR ELEVATION
FLG.	FLANGE
H.P.	HIGH POINT
H.W.L.	HIGH WATER LEVEL
INV.	INVERT
LG.	LONG
L.R.	LONG RADIUS
L.W.L.	LOW WATER LEVEL
MAX.	MAXIMUM
M.J.	MECHANICAL JOINT
M.W.L.	MAXIMUM WATER LEVEL
MIN.	MINIMUM
M.V.	MUD VALVE
M.F.M.	MAGNETIC FLOW METER
N.T.S.	NOT TO SCALE
O.C.	ON CENTER
OPER.	OPERATOR
P.E.	PLAIN END
PL.	PLATE
P.S.I.	POUNDS PER SQUARE INCH
RED.	REDUCER, REDUCING
RM.	ROTAMETER
S.G.	SLIDE GATE
SHT.	SHEET
SL.G.	SLUICE GATE
SMH	SANITARY MANHOLE
S.O.	SIDE OUTLET
SQ.	SQUARE
S.R.	SHORT RADIUS
S.S.	STAINLESS STEEL
SUCT.	SUCTION
TL.V.	TELESCOPING VALVE
T.O.C.	TOP OF CONCRETE
TYP.	TYPICAL
T.O.W.	TOP OF WEIR
VEN.	VENTURI
V.O.R.	VALVE ON RISER
W/	WITH
WEIR EL.	WEIR CREST ELEVATION
W.L. EL.	WATER LEVEL ELEVATION
W.P.	WALL PIPE
W.S.	WALL SLEEVE

ABBREVIATIONS FOR USAGE

ABBREVIATION	DESCRIPTION	TYPE OF PIPE
AIR	AIR SUPPLY	S.S.
ATDr	AERATION TANK DRAIN	DUCTILE IRON
ATE	AERATION TANK EFFLUENT	DUCTILE IRON
ATI	AERATION TANK INFLUENT	DUCTILE IRON
CW	CITY WATER	DUCTILE IRON/COPPER (<3")
CO	CLEANOUT	DUCTILE IRON
CONT. PIPE	CONTAINMENT PIPE	CPVC CARRIER/CPVC CONTAINMENT
Dr	DRAIN	DUCTILE IRON
DW	DILUTION WATER	DUCTILE IRON
EFF	EFFLUENT	DUCTILE IRON
FS	FROTH SPRAY (PLANT WATER)	DUCTILE IRON
FM	FORCE MAIN	DUCTILE IRON
GBT FEED	GRAVITY BELT THICKENER FEED	DUCTILE IRON
GThU	GRAVITY THICKENER UNDERFLOW	DUCTILE IRON
GThO	GRAVITY THICKENER OVERFLOW	DUCTILE IRON
GD	GRIT DISCHARGE	DUCTILE IRON
GS	GRIT SUCTION	DUCTILE IRON
GO	GRIT OVERFLOW	DUCTILE IRON
HPPW	HIGH PRESSURE PLANT WATER	DUCTILE IRON
INFL.	INFLUENT	DUCTILE IRON
$KMNO_4$	POTASSIUM PERMANGANATE	P.V.C.
LPA	LOW PRESSURE AIR	S.S.
NaOH	SODIUM HYDROXIDE	C.P.V.C.
NaOCl	SODIUM HYPOCHLORITE	C.P.V.C.
ODOR	ODOR CONTROL DUCT	P.V.C.(SDR 35) (BURIED AREAS) F.R.P.(EXPOSED EXTERIOR AREAS)
OVER	OVERFLOW	DUCTILE IRON
POLY	POLYMER SOLUTION	P.V.C.
PW	PLANT WATER	DUCTILE IRON (3" OR GREATER) COPPER (SMALLER THAN 3")
PTE	PRIMARY TANK EFFLUENT	DUCTILE IRON
PTI	PRIMARY TANK INFLUENT	DUCTILE IRON
PS	PLANT SEWER	DUCTILE IRON
PSI	PRIMARY SLUDGE	DUCTILE IRON (GLASS LINED FOR SUCTION PIPING)
PSc	PRIMARY SCUM	DUCTILE IRON (GLASS LINED)
RAS	RETURN ACTIVATED SLUDGE	DUCTILE IRON
SAN	SANITARY SEWER	P.V.C. (SDR 35) OR DUCTILE IRON
SC	SERVICE CONNECTION	DUCTILE IRON
SCE	SECONDARY CLARIFIER EFFLUENT	DUCTILE IRON
SCI	SECONDARY CLARIFIER INFLUENT	DUCTILE IRON
S.C.	SERVICE CONNECTION	DUCTILE IRON
SD	SLUDGE DISCHARGE	DUCTILE IRON
SEPTAGE	SEPTAGE	DUCTILE IRON
SL	SAMPLER LINE	POLY
SOD.HYPO.	SODIUM HYPOCHLORITE	CPVC CARRIER/CPVC CONTAINMENT
SOD.HYD.	SODIUM HYDROXIDE	CPVC CARRIER/CPVC CONTAINMENT
SPD	SUMP PUMP DISCHARGE	Sch 80 PVC
SSc	SECONDARY SCUM	DUCTILE IRON
TEMP INFLUENT	TEMPORARY INFLUENT	DUCTILE IRON
TWAS	THICKENED WASTE ACTIVATED SLUDGE	DUCTILE IRON(GLASS LINED)
ThSI	THICKENED SLUDGE	DUCTILE IRON(GLASS LINED)
VENT	VENT	P.V.C.
WAS	WASTE ACTIVATED SLUDGE	DUCTILE IRON

ABBREVIATIONS FOR PIPE TYPES

ABBREVIATION	DESCRIPTION
A.C.C.M.P.	ASPHALT COATED CORRUGATED METAL PIPE
C.I.	CAST IRON PIPE
CU	COPPER PIPE
D.I.P.	DUCTILE IRON PIPE
FRP	FIBERGLASS REINFORCED PIPE
GALV.	GALVANIZED PIPE
P.C.C.P.	PRESTRESSED CONCRETE CYLINDER PIPE
POLY	POLYETHYLENE PIPE
P.V.C.	POLYVINYL CHLORIDE PIPE
C.P.V.C.	CHLORINATED POLYVINYL CHLORIDE PIPE
R.C.P.	REINFORCED CONCRETE PIPE
S	STEEL PIPE
S.S.	STAINLESS STEEL PIPE

EARTH TECH
655 Winding Brook Drive Glastonbury, CT. 06033-4337 (860) 657-1200

NO.	REVISIONS	BY	DATE
1	REVISED TO RECORD PLAN	JPR	11/02

BRANFORD, CT
WASTEWATER TREATMENT FACILITY
ABBREVIATIONS AND SYMBOLS

DESIGNED BY DGS	DWG SCALE NONE
DRAWN BY NThomson	CONTRACT NO 31
CHECKED BY KAB	DATE FEB. 1999

M-1
SHEET 74 OF 169

RECORD PLAN

PLOT DATE 02-18-99 PLOT SCALE 1=1
FILENAME 21871M-1.dwg

E:\C-AD\MECHANICAL\21871M-1.DWG, Model, 02/02/2004 02:14:27 PM, acom.pmatic, 1:1

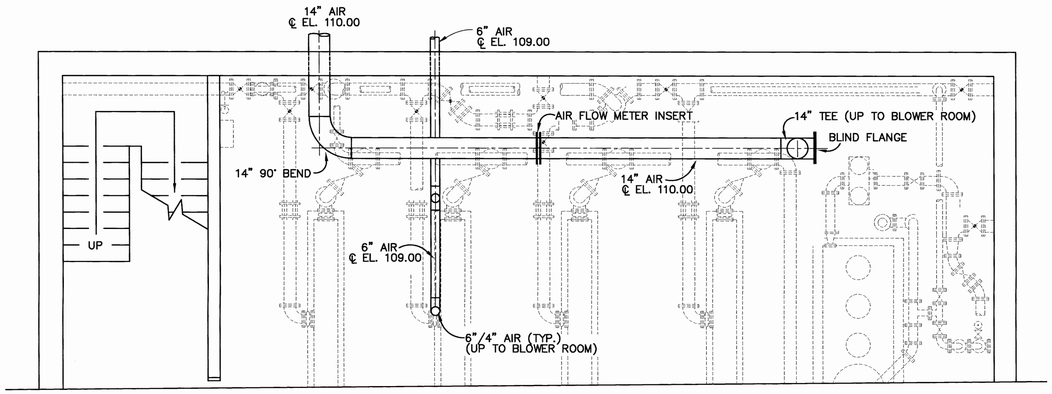

BASEMENT AIR PIPING PLAN

(Showing process piping dashed)
SCALE: 1/4"=1'-0"

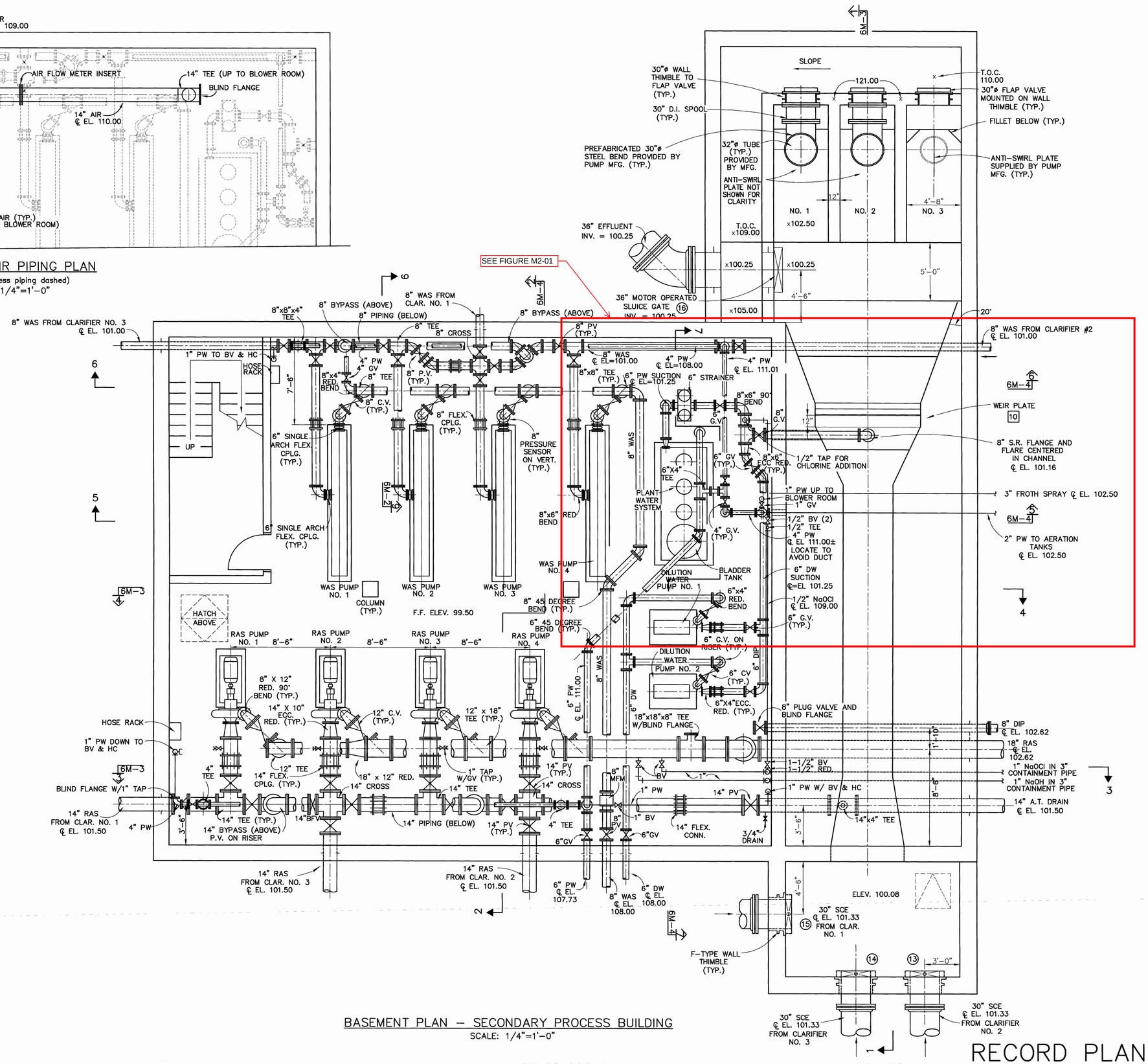

BASEMENT PLAN – SECONDARY PROCESS BUILDING

SCALE: 1/4"=1'-0"

RECORD PLAN

NO.	REVISIONS	BY	DATE
1	REVISED TO RECORD PLAN	JPR	11/02

EARTH TECH
655 Winding Brook Drive Glastonbury, CT 06033-1337 (860) 657-1200

BRANFORD, CT
WASTEWATER TREATMENT FACILITY
SECONDARY PROCESS BUILDING – BASEMENT PLAN

DESIGNED BY DGS	DWG SCALE AS NOTED
DRAWN BY JZANIBONI	CONTRACT NO 31
CHECKED BY KAB	DATE FEB. 1999

6M-1
SHEET 85 OF 169

PLOT DATE 09-24-98 PLOT SCALE 48
FILENAME 218716M1.dwg

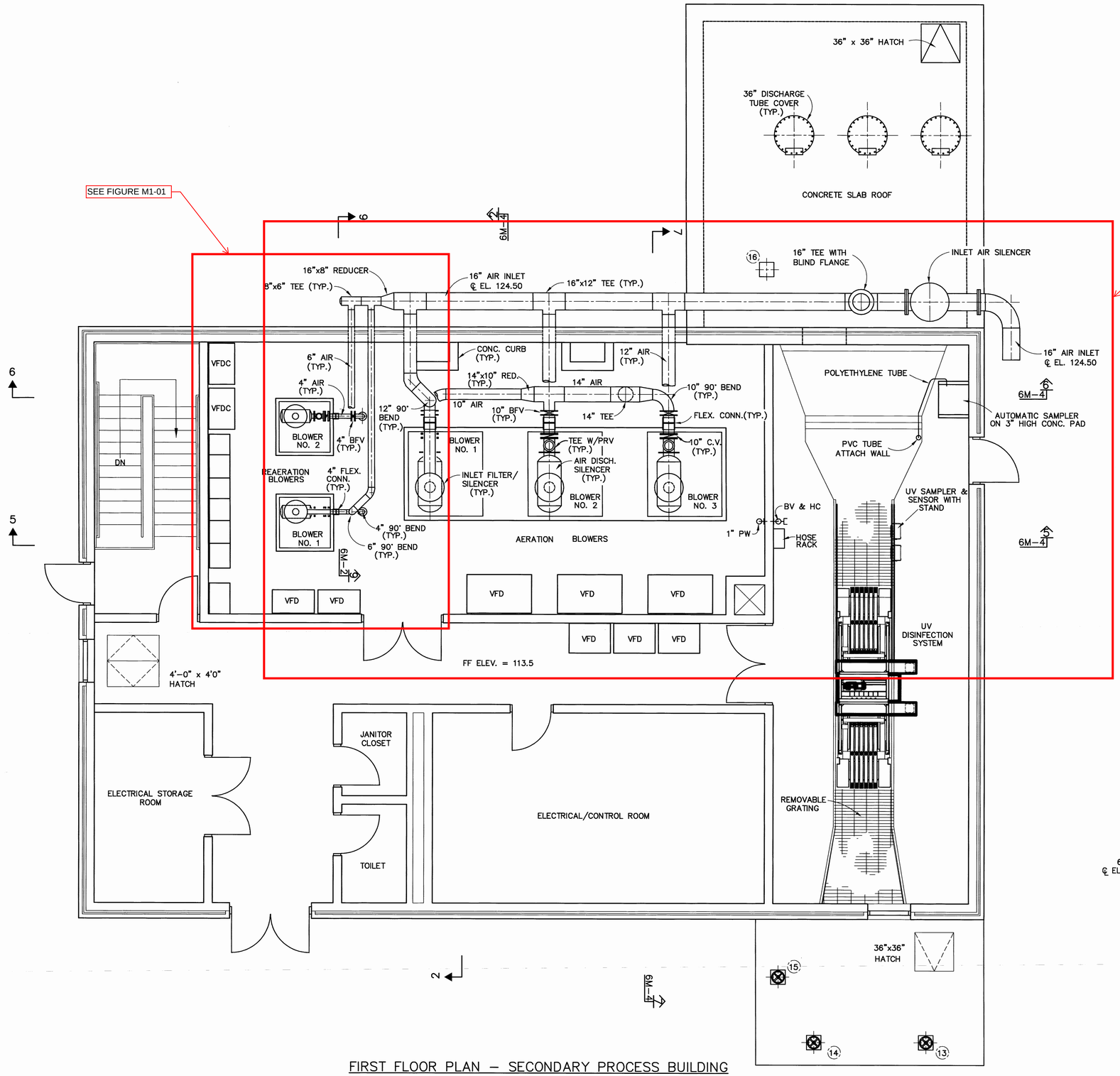

FIRST FLOOR PLAN – SECONDARY PROCESS BUILDING
SCALE: 1/4"=1'-0"

BLOWER PADS, TYPICAL: SEE DWG. GS-1 FOR EQUIPMENT PAD DETAIL. DRILL AND INSTALL EXPOXY ANCHORS AND NON-SHRINK LEVELING GROUT. SIZE, NUMBER, SPACING AND EDGE DISTANCE OF BOLTS AND GROUTING REQUIRMENTS PER MANUFACTURER RECOMMENDATIONS.

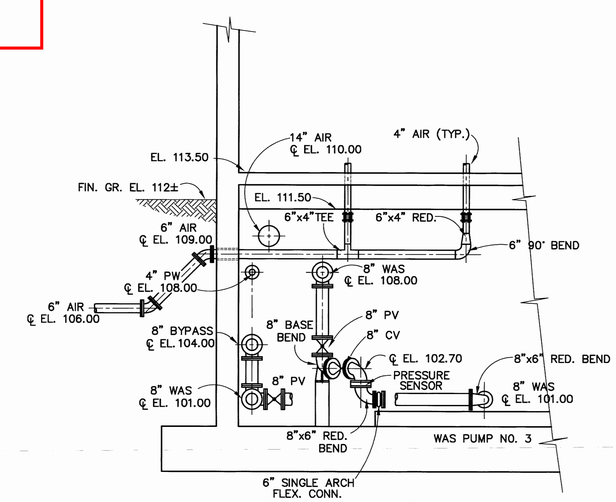

SECTION 6M-1,6M-2
SCALE: 1/4"=1'-0"

NOTE: BLOWERS NOT SHOWN.

RECORD PLAN

EARTH TECH
655 Winding Brook Drive Glastonbury, Ct. 06033-4337 (860) 657-1200

NO.	REVISIONS	BY	DATE
1	REVISED TO RECORD PLAN	JPR	11/02

BRANFORD, CT
WASTEWATER TREATMENT FACILITY
SECONDARY PROCESS BUILDING – FIRST FLOOR PLAN

DESIGNED BY D.G.S.	DWG SCALE AS NOTED
DRAWN BY JZANIBONI	CONTRACT NO 31
CHECKED BY K.A.B.	DATE FEB. 1999

6M-2

SHEET 86 OF 169

PLOT DATE 09-24-98 PLOT SCALE 48
FILENAME 218716m2.dwg

L:\work\39603\CAD\AS BUILTS\WETH\M2.dwg, Model, 01/27/2004 02:24:37 PM, adam.martin, 1:48

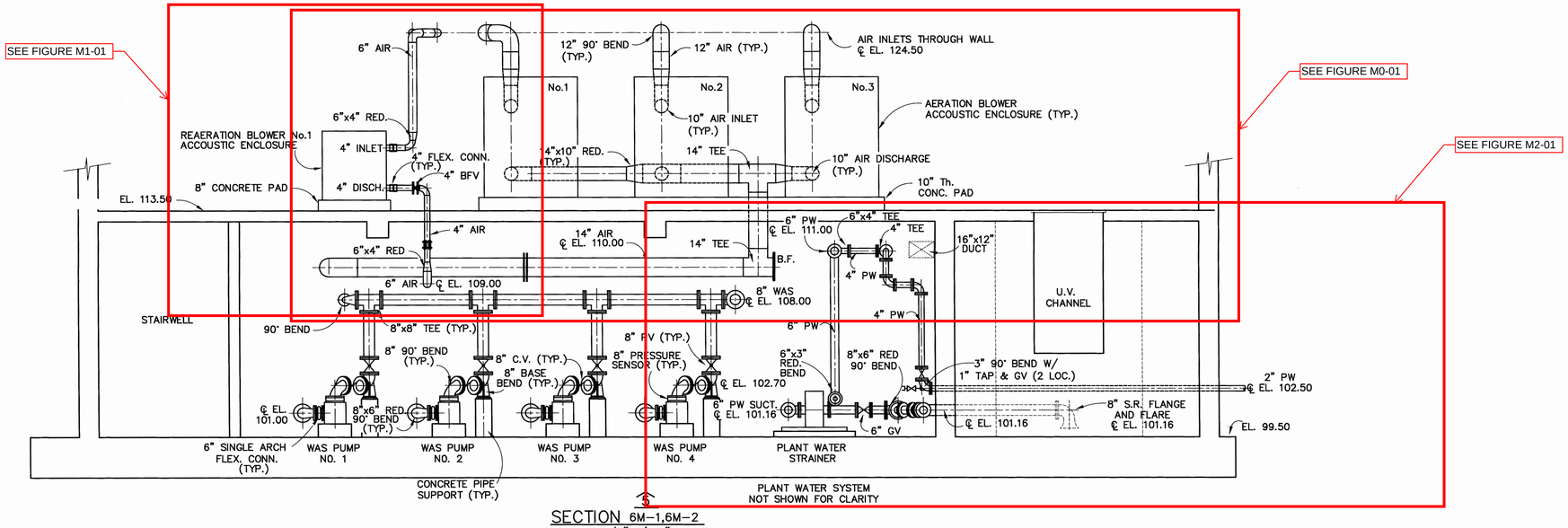

SECTION 6M-1,6M-2
SCALE: 1/4"=1'-0"

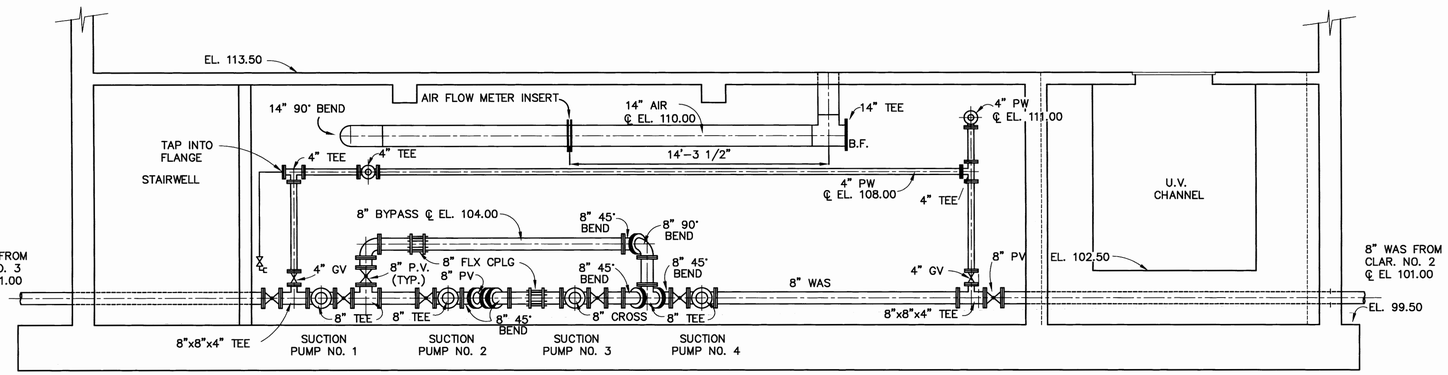

SECTION 6M-1,6M-2
SCALE: 1/4"=1'-0"

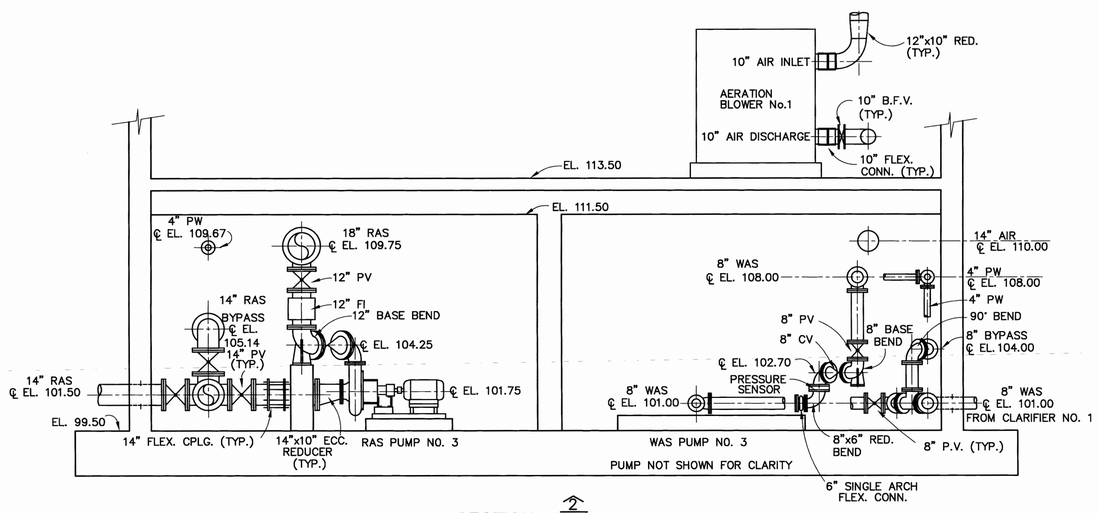

SECTION 6M-1,6M-2
SCALE: 1/4"=1'-0"

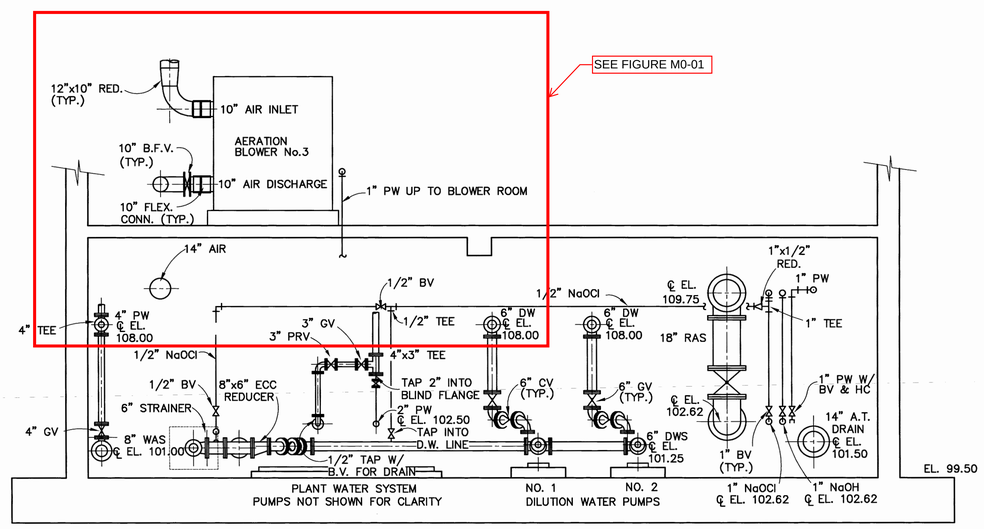

SECTION 6M-1,6M-2
SCALE: 1/4"=1'-0"

RECORD PLAN

EARTH TECH
655 Winding Brook Drive Glastonbury, Ct. 06033-4337 (860) 657-1200

NO.	REVISIONS	BY	DATE
1	REVISED TO RECORD PLAN	JPR	11/02

BRANFORD, CT
WASTEWATER TREATMENT FACILITY
SECONDARY PROCESS BUILDING - SECTIONS

DESIGNED BY D.G.S.	DWG SCALE AS NOTED
DRAWN BY J.ZANIBONI	CONTRACT NO 31
CHECKED BY K.A.B.	DATE FEB. 1999

6M-4

SHEET 88 OF 169

PLOT DATE 09-24-98 PLOT SCALE 48
FILENAME 218716m4.dwg

L:\work\39603\C-AD\AS-BUILTS\MECH\M04.dwg, Model: 01/27/2004 01:58:47 PM, acommorto, 1:48

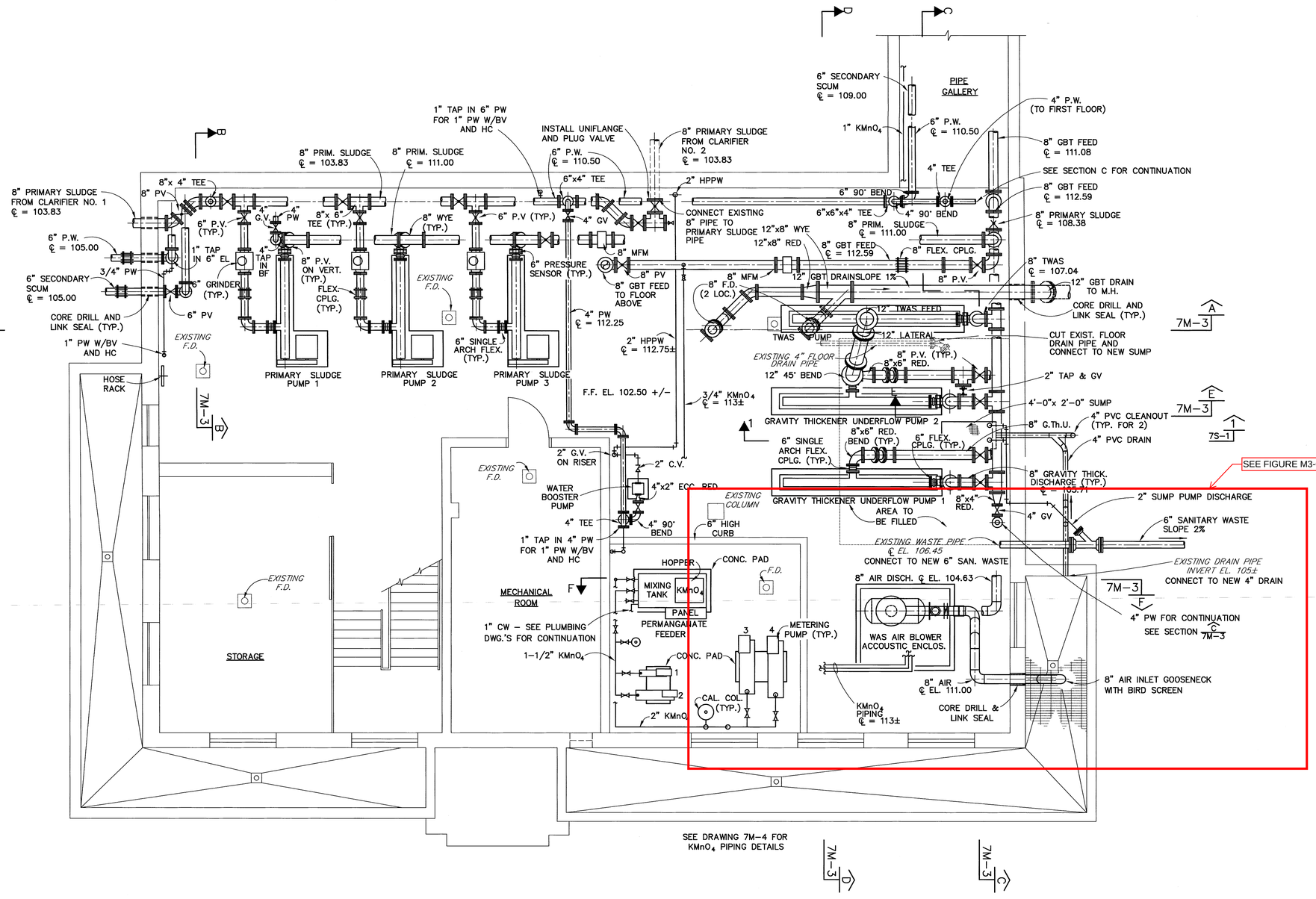

BASEMENT FLOOR PLAN

SCALE: 1/4" = 1'-0"

RECORD PLAN

EARTH TECH
655 Winding Brook Drive Glastonbury, CT. 06033-4337 (860) 657-1200

NO.	REVISIONS	BY	DATE
1	REVISED TO RECORD PLAN	JPR	11/02

BRANFORD, CT
WASTEWATER TREATMENT FACILITY
PROCESS BUILDING – BASEMENT PLAN

DESIGNED BY DQS	DWG SCALE AS NOTED
DRAWN BY FPiacella	CONTRACT NO 31
CHECKED BY KAB	DATE FEB. 1999

7M-1

SHEET 89 OF 169

PLOT DATE 01-14-99 PLOT SCALE 48
FILENAME 218717m1.dwg

L:\work\38603\CAD\6 BLdg\3\VECtr\7M1.DWG, Model, 01/27/2004 01:53:50 PM, cadmin\arch, 1:48

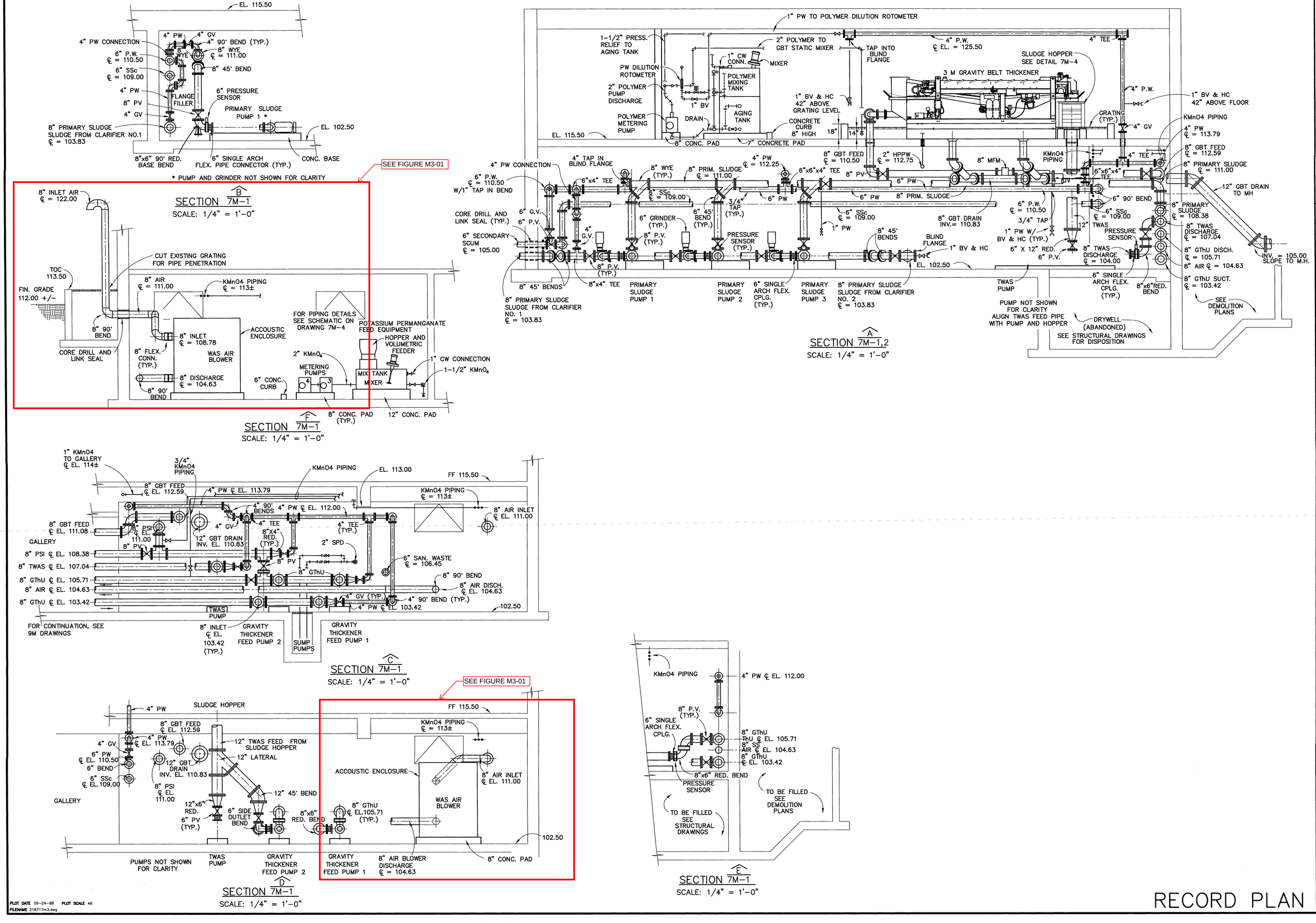

EARTH TECH
855 Winding Brook Drive Glastonbury, CT. 06033-1337 (860) 657-1200

NO.	REVISIONS	By	DATE
1	REVISED TO RECORD PLAN	JPR	11/02

BRANFORD, CT
WASTEWATER TREATMENT FACILITY
PROCESS BUILDING – SECTIONS AND SCHEMATIC

DESIGNED BY DGS	DWG SCALE AS NOTED
DRAWN BY JZANIBONI	CONTRACT NO. 31
CHECKED BY KAB	DATE FEB. 1999

7M-3
SHEET 91 OF169

PLOT DATE 09-24-98 PLOT SCALE 48
FILENAME 218717m3.dwg

SLASHED LINES INDICATE EXISTING ELECTRICAL ITEMS TO BE DE-ENERGIZED, DISCONNECTED AND REMOVED, U.O.N.

COMBINATION DISCONNECT SWITCH AND MAGNETIC STARTER

MCB C — COMBINATION MOLDED CASE BREAKER AND MAGNETIC CONTACTOR

MCP — COMBINATION MOTOR CIRCUIT PROTECTOR AND MAGNETIC ACROSS THE LINE STARTER

MCP / RVNR — COMBINATION MOTOR CIRCUIT PROTECTOR AND MAGNETIC STARTER AS FOLLOWS:
- 2S2W = 2 SPEED 2 WINDING
- 2S1W = 2 SPEED 1 WINDING
- RVNR = REDUCED VOLTAGE NON-REVERSING AUTO-TRANSFORMER
- FVR = FULL VOLTAGE REVERSING
- SSRV = SOLID STATE REDUCED VOLTAGE

GROUND FAULT CIRCUIT BREAKER WITH SHUNT TRIP

100/30 — MOLDED CASE AIR CIRCUIT BREAKER (3 POLE UNLESS OTHERWISE NOTED) 100 REFERS TO FRAME AMPERES SIZE & 30 REFERS TO TRIP RATING

EQUIPMENT AND/OR DEVICES BETWEEN INVERTED ARROWS INDICATES THAT IT IS OF THE DRAW OUT TYPE

CURRENT TRANSFORMER (C.T.)

C — POWER FACTOR CORRECTION CAPACITOR

POTENTIAL TRANSFORMER (P.T.)

TRANSFORMER (AS NOTED)

DELTA

GROUNDED WYE

GROUND

FUSE

CLF — CURRENT LIMITING FUSE

M S S — MOTOR, NUMBER INDICATES HORSEPOWER

M — WOUND ROTOR MOTOR

W/D — 2 WINDING, 2 SPEED MOTOR

ϕF — PHASE FAILURE RELAY

ELECTRIC HEATING UNIT

R G — INDICATING LIGHT: R-RED G-GREEN W-WHITE A-AMBER

F — DISCONNECT SWITCH, 600 VOLT-30A,3P,UON F INDICATES FUSED TYPE

0-90 SEC. TR — VARIABLE TIME DELAY RELAY, 0-90" DENOTES 0 TO 90 SECOND DELAY

TS — PROGRAM TIME SWITCH OR TAB TYPE REPEATING TIMER

NORMALLY OPEN CONTACT

NORMALLY CLOSED CONTACT

PUSHBUTTON NORMALLY CLOSED

PUSHBUTTON NORMALLY OPEN

M — PUSHBUTTON MAINTAINING TYPE

MANUAL MOTOR STARTER WITH PILOT LIGHT

WALL MOUNTED COMBINATION MOTOR CIRCUIT PROTECTOR AND ACROSS THE LINE MAGNETIC MOTOR STARTER

UNIT HEATER

G 2 b — CEILING OUTLET AND INCANDESCENT OR HIGH INTENSITY DISCHARGE FIXTURE "G" INDICATES FIXTURE TYPE, "b" INDICATES CONTROLLED BY SWITCH "b" "2" INDICATES CIRCUIT NUMBER

WALL MOUNTED LIGHTING FIXTURES. NOTATION SAME AS ABOVE

FLUORESCENT LIGHTING FIXTURE. NOTATION SAME AS ABOVE

WALL OUTLET AND EXIT SIGN

CEILING OUTLET AND EXIT SIGN (ARROW INDICATES DIRECTION OF EGRESS)

ELU#1 — EMERGENCY LIGHTING BATTERY UNIT WITH LIGHT HEADS. 1 DENOTES UNIT NUMBER

1 — REMOTE EMERGENCY LIGHTING HEAD, WALL MOUNTED

1 — REMOTE EMERGENCY LIGHTING HEAD, CEILING MOUNTED

(1 DENOTES CONNECTED TO ELU#1)

TYPE "A" — INDICATES THAT ALL LIGHTING FIXTURES WITHIN THE ROOM OR AREA IN WHICH THIS NOTATION APPEARS ARE TYPE "A"

Sc — SINGLE POLE SWITCH CONTROLLING LIGHTS "C"

Sp — SINGLE POLE SWITCH AND PILOT LIGHT

Sk — SINGLE POLE SWITCH, KEY OPERATED

S_2 — DOUBLE POLE SWITCH

S_3 — THREE WAY SWITCH

S_4 — FOUR WAY SWITCH

S_M — MOMENTARY CONTACT SWITCH

POLE MOUNTED LIGHT FIXTURE

POWER COMPANY POLE

TELEPHONE OUTLET - WALL TYPE

TELEPHONE OUTLET - DESK TYPE

S — CEILING SPEAKER FLUSH MOUNTED

S — WALL SPEAKER

H — WALL MOUNTED INTERCOM HORN, W=WIDE ANGLE, WP=WEATHERPROOF, CR=CORROSION RESISTANT

S — CEILING SPEAKER SURFACE MOUNTED

S — BI-DIRECTIONAL WALL MOUNTED SPEAKER

SK — SECURITY SYSTEM KEYPAD

PIR — PASSIVE INFRA-RED DEVICE, SECURITY SYSTEM

H — HANDSET- TELEPHONE/INTERCOM

F — MANUAL FIRE ALARM STATION

F — FIRE ALARM HORN & STROBE

F — FIRE ALARM BEACON

HORN & STROBE

SD — SMOKE DETECTOR, PHOTOELECTRIC TYPE

SD I — SMOKE DETECTOR, IONIZATION TYPE

DSD — DUCT SMOKE DETECTOR

RTS — REMOTE TEST STATION FOR DUCT SMOKE DETECTOR

HEAT DETECTOR, COMBINATION RATE-OF-RISE AND FIXED TEMPERATURE

135 — HEAT DETECTOR, FIXED TEMPERATURE, NUMBER INDICATES TEMPERATURE SETTING

SINGLE FACE CLOCK AND CLOCK HANGER OUTLET. "SK" DENOTES SKELETON FACE.

20A-2P-3W-208V RECEPTACLE

13 — DUPLEX RECEPTACLE, GROUNDED TYPE-13 INDICATES CIRCUIT NUMBER UON MOUNTING HEIGHT SHALL BE AS PER SPEC. SECTION 16,500

30 — SPECIAL PURPOSE RECEPTACLE, 240, 2P, 3 WIRE, OR AS OTHERWISE INDICATED (30 INDICATES AMPERE RATING)

GF — GROUND FAULT RECEPTACLE (MOUNT 4'-0" A.F.F.)

GROUND ROD

BUILDING GROUND GRID

C S — TERMINAL BOX, C" INDICATES CONTROL & ALARM WIRING; "S" INDICATES SHIELDED SIGNAL WRING. C AND S ARE NOT NECESSARILY NOTED ON ALL TERMINAL BOXES.

SURFACE MOUNTED POWER PANEL

FLUSH MOUNTED POWER PANEL

SURFACE MOUNTED LIGHTING PANEL

FLUSH MOUNTED LIGHTING PANEL

CONDUIT RUN EXPOSED (DIAGONALS DENOTE THE NUMBER OF NO. 12 AWG WIRES. IF NO DIAGONALS, 2 NO. 12 WIRES & 1#12 GND IN 3/4" CONDUIT U.O.N.)

LPI-1,3 — HOMERUN. RUN TO PANEL "LPI" CIRCUITS 1 & 3

CONDUIT RUN CONCEALED (2 NO. 12 WIRES & 1#12 GND IN 3/4" CONDUIT UNLESS OTHERWISE NOTED)

CONDUIT RUN UNDERGROUND

FLEXIBLE CONDUIT

CONDUIT TURNING UP

CONDUIT TURNING DOWN

2(3#8,1"C.) — 2, 1-INCH CONDUITS EACH CONDUIT CONTAINING 3-#8 AWG COPPER WIRES

3/4" CE — EMPTY CONDUIT. NUMERAL DENOTES SIZE

1-2/C#14TSP — ONE-TWO CONDUCTOR, NO. 14 AWG, TWISTED SHIELDED PAIR CABLE

AB	AERATION BASIN
AC	ABOVE COUNTER
AFF	ABOVE FINISHED FLOOR
AFG	ABOVE FINISHED GRADE
AIP	ALARM - INDICATOR PANEL
AEC	AUTOMATIC EXERCISER CONTROLLER
AQ	AQUASTAT
AR	ALARM RELAY
ATC	AUTOMATIC TEMPERATURE CONTROL
ATS	AUTOMATIC TRANSFER SWITCH
BB	BASEBOARD HEATER
BC	BATTERY CHARGER
BDTS	BLOWER DISCHARGE TEMPERATURE SWITCH
BDTT	BLOWER DISCHARGE TEMPERATURE TRANSMITTER
BG	BREAK GLASS DETECTOR FOR SECURITY SYSTEM
CBR	COARSE BAR RACK
CF	COMPACT FLUORESCENT
CPT	CONTROL POWER TRANSFORMER
CR	CONTROL RELAY
℄	CENTER LINE
C	COMPUTER OUTLET
C	LIGHTING OR HEATING CONTACTOR, MECHANICALLY HELD TYPE
CP	CONTROL PANEL
CR	CORROSION RESISTANT
CTU	CENTRAL TELEMETRY UNIT
CU	CONDENSING UNIT
DH	DEHUMIDIFIER
DMFM	DIGITAL MULTIFUNCTION METER
DO	DISSOLVED OXYGEN
DP	DIFFERENTIAL PRESSURE CELL
DRG. DWG.	DRAWING
DS -R	DOOR SWITCH FOR SECURITY SYSTEM; R INDICATES ROLL-UP DOOR
DSD	DUCT SMOKE DETECTOR
EAN	EXCEPT AS NOTED
EBB	ELECTRIC BASEBOARD
EC	ELECTRICAL CONTRACTOR
EF	EXHAUST FAN
EMH	ELECTRICAL MANHOLE
EUH	ELECTRIC UNIT HEATER
ETM	ELAPSED TIME METER
ESARP	EYEWASH & SHOWER ALARM RELAY PANEL
EWH	ELECTRIC WATER HEATER
FBO	FURNISHED UNDER OTHER DIVISIONS
FBR	FINE BAR RACK
FE	FLOW ELEMENT
FIT	FLOW INDICATOR TRANSMITTER
FL	FLOW SWITCH
FLUOR	FLUORESCENT
FP	FLOW PROPORTIONER
FS	FLOAT SWITCH
FSR	FORWARD-STOP-REVERSE PUSHBUTTON CONTROL STATION
FSS	FAST-SLOW-LOCKOUT STOP PUSHBUTTON CONTROL STATION
FT	FLOW TRANSMITTER
FURN.	FURNISHED
FUT.	FUTURE
GBT	GRAVITY BELT THICKENER
GCP	GRINDER CP
GF	GROUND FAULT RELAY
GND,GRD	GROUNDING CONDUCTOR (EQUIPMENT)
GRS	GALVANIZED RIGID STEEL
GS	GAS SENSOR
GT	GRAVITY THICKENER
GTF	GRAVITY THICKENER FEED
HAZARDOUS / NEMA 7	DENOTES ALL ELECTRICAL EQUIPMENT AND THE INSTALLATION THEREOF LOCATED WITHIN THE ROOM OR AREA IN WHICH THIS NOTATION APPEARS SHALL CONFORM TO THE N.E.C. FOR A CLASS I, DIVISION I, GROUP D HAZARDOUS AREA
HOA	HAND-OFF-AUTOMATIC SELECTOR SWITCH
HH	HANDHOLE
HGD	HAZARDOUS GAS DETECTOR
HL	HIGH LEVEL
HHL	HIGH HIGH LEVEL
HPS	HIGH PRESSURE SODIUM
HTR	MOTOR SPACE HEATER
I/F	CURRENT TO FREQUENCY CONVERTER
INC	INCANDESCENT
IPCP	INFLUENT PUMPS CONTROL PANEL
IR	INTERNAL RECIRCULATION
ISR	INTRINSICALLY SAFE RELAY
J J	JUNCTION BOX
LDR	LOAD DETECTOR RELAY
LE	LEVEL SENSOR
LL	LOW LEVEL
LT	LEVEL TRANSMITTER
LIT	LEVEL INDICATOR TRANSMITTER
LO	LOCKOUT
LOR	LOCAL-OFF-REMOTE SELECTOR SWITCH
LP	LEVEL PROBE
LS	LIMIT SWITCH
M	MOTOR RUNNING RELAY
M	DAMPER OR LOUVER MOTOR
MAU	MAKE UP AIR UNIT
MCC	MOTOR CONTROL CENTER
MCP	MIXER CP
MDM	MOISTURE DETECTION MODULE
MH	MANHOLE
MeH	METAL HALIDE
MFR	MANUFACTURER
MGD	METHANE GAS DETECTOR
MOV	MOTOR OPERATED VALVE
MSCP	MECHANICAL SCREEN CP
MT	MINUTE
MS	MOISTURE SENSOR
NC	NORMALLY CLOSED
NEMA 4 / NEMA 4X	INDICATES THAT ALL ELECTRICAL EQUIPMENT INSTALLED WITHIN THE ROOM OR AREA IN WHICH THIS NOTATION APPEARS SHALL BE NEMA 4 CONSTRUCTION EXCEPT WHERE OTHERWISE NOTED. SIMILARLY FOR NEMA 4X.
NO	NORMALLY OPEN
NTS	NOT TO SCALE
OO	ON-OFF SELECTOR SWITCH STATION
OOR	ON-OFF SELECTOR SWITCH STATION WITH RED PILOT LIGHT
OC	OPEN-CLOSE PUSHBUTTON CONTROL STATION
OH	OVERHEAD
OL	MOTOR OVERLOAD HEATER
OP	OIL PRESSURE SWITCH
OTMP	OIL TANK MONITORING PANEL
ORP	ORP SENSOR (BY DIV. 13)
OS	OIL SENSOR
OSCP	ODOR SYSTEM CONTROL PANEL
OSF	ODOR SYSTEM FAN
PAT	PRIMARY ANOXIC TANK
PB	PULL BOX
PBL	PUSHBUTTON CONTROL STATION MOMENTARY TYPE WITH LOCK-OUT DEVICE, STOP-START
PBM	PUSHBUTTON CONTROL STATION MAINTAINED CONTACT TYPE, STOP START
PC	PULL CORD
PCC	PUMP CONTROL CABINET
PCP	PUMP CONTROL PANEL
PEPSP	PEDESTAL, PLANT SEWER PUMPS
PESSP	PEDESTAL, SECONDARY SCUM PUMPS
PFR	PHASE FAILURE RELAY
PH	PH PROBE (BY DIV. 13)
PT	PRESSURE TRANSMITTER
PID	PASSIVE INFRARED DETECTOR
PIT	PRESSURE INDICATOR TRANSMITTER
PL	PUSHBUTTON CONTROL STATION MOMENTARY TYPE WITH LOCK-OUT DEVICE, STOP
POT	POTENTIOMETER
PR	PROBE
PSPCP	PLANT SEWER PUMPS CP
PUCP	POLYMER UNIT CP
PS	PRESSURE SWITCH
PST	PUMPING STATION
PW	PLANT WATER
RES	RESET AND LOCK OUT TYPE STOP PUSHBUTTON CONTROL STATION WITH RED ALARM LIGHTS
RLB	RESISTOR LOAD BANK
RP	RELAY PANEL
RTS	REMOTE TERMINAL STATION
RTU	REMOTE TELEMETRY UNIT
SASCP	SECURITY ALARM SYSTEM CONTROL PANEL
SA	STROKE ADJUSTER
SAT	SECONDARY ANOXIC TANK
SEL	SELECTOR SWITCH
SPCP	SCREENINGS PRESS CP
SI	SPEED INDICATOR
SV	SOLENOID VALVE
SCR	D.C. MOTOR SPEED CONTROL PANEL
SFL	SPRINKLER SYSTEM FLOW SWITCH
SGCP	SLUICE GATE CP
SHT	SLUDGE HOLDING TANK
SP	SPARE
SPCP	SCREENINGS PRESS CP
SSPCP	SECONDARY SCUM PUMPS CP
SS	SLUDGE STORAGE
SR	SPEED CONTROL RHEOSTATS
ST	SHUNT TRIP RELAY
STS	SPRINKLER SYSTEM TAMPER SWITCH
T	THERMOSTAT "OD" DENOTES OUTDOOR TYPE
T	TRANSFORMER
TB	TERMINAL BOX - COMPLETE WITH TERMINALS, BY DIV.16- I-FOR INTERCOM, FA- FOR FIRE ALARM, S- FOR SHIELDED CABLES, A- ALARM CABLES, SA-FOR SECURITY ALARM
TC	TIME CLOCK
TD	MOTOR TEMPERATURE DETECTOR
TDM	MOTOR TEMPERATURE DETECTOR SERVICE OR CONTROL MODULE
TDC	TIME DELAY CLOSING
TDO	TIME DELAY OPENING
TG	TACHOMETER GENERATOR
TE	TEMPERATURE ELEMENT
TIT	TEMPERATURE INDICATING TRANSMITTER
TOC	TOP OF CONCRETE
TQ	TORQUE OVERLOAD SWITCH
TS	TIME SWITCH
TVSS	TRANSIENT VOLTAGE SURGE SUPPRESSOR
TWAS	THICKENED WASTE ACTIVATED SLUDGE
TYP	TYPICAL
UG	UNDERGROUND
UON	UNLESS OTHERWISE NOTED
UV	ULTRAVIOLET
UV-PDC	UV-POWER DISTRIBUTION CENTER
UV-SCC	UV-SYSTEM CONTROL CENTER
VD	VIBRATION DETECTOR
VFC	VENDOR FURNISHED CABLE
VFDC	VARIABLE FREQUENCY DRIVE CONTROLLER
W/	WITH
WAS	WASTE ACTIVATED SLUDGE
WP	WEATHERPROOF (NEMA 4 UNLESS OTHERWISE NOTED)
WM	WATTMETER (DEMAND)
WHM	WATTHOUR METER
WS	WINDOW SWITCH FOR SECURITY SYSTEM
WW	WIREWAY
WWTF	WASTEWATER TREATMENT FACILITY
XP	EXPLOSION PROOF
ZR	ZERO RETURN

RECORD PLAN

EARTH TECH
855 Winding Brook Drive Glastonbury, CT 06033-4337 (860) 657-1200

NO.	REVISIONS	BY	DATE
1	REVISED TO RECORD PLAN	JPR	11/02

BRANFORD, CT
WASTEWATER TREATMENT FACILITY
LEGEND

DESIGNED BY	DWG SCALE NTS
DRAWN BY JZaniboni	CONTRACT NO 31
CHECKED BY	DATE FEB. 1999

E-1
SHEET 1 OF 169

PLOT DATE 05-04-99 PLOT SCALE 1
FILENAME 21871E1.dwg

L:\work\39931\CAD\AS BUILTS\ELECTRICAL\E1.dwg, Model, 02/02/2004 11:15:57 AM, adam-martin, 1:1

skidooM95: we're just gonna go get some dinner
skidooM95: and then have some drinks or something

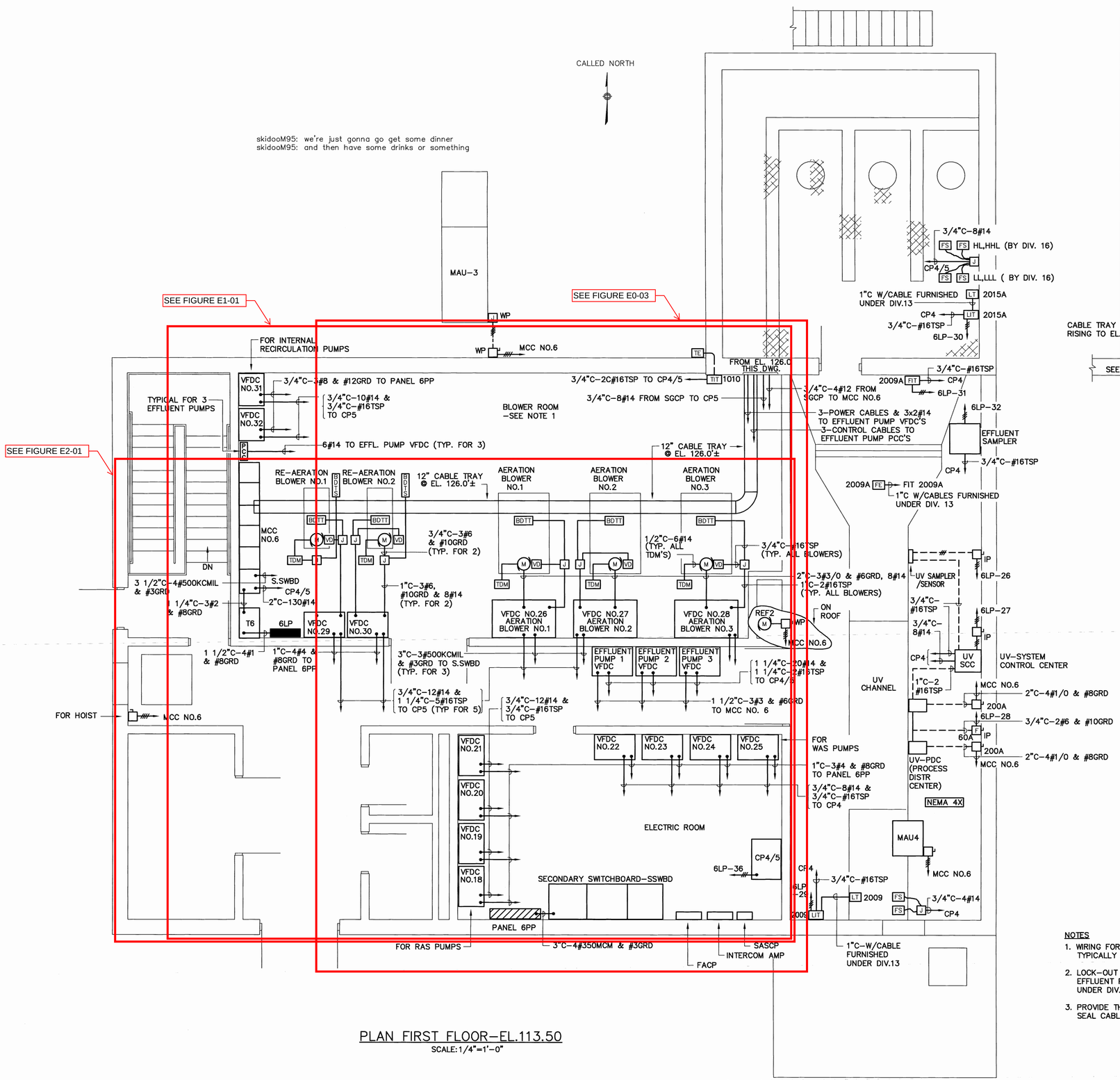

PLAN FIRST FLOOR-EL.113.50

SCALE: 1/4"=1'-0"

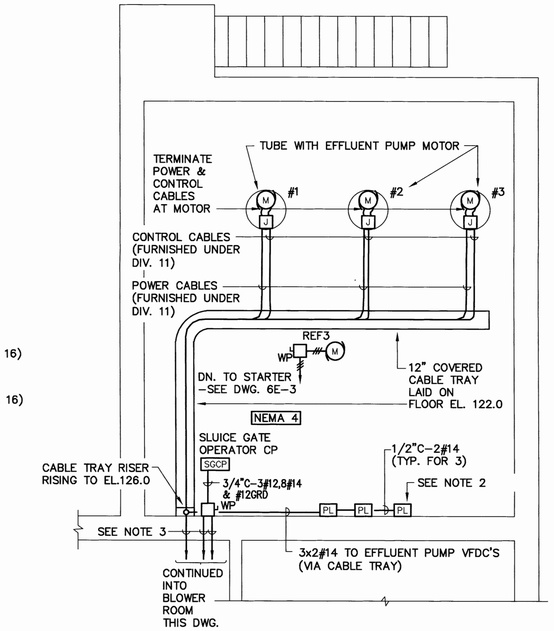

POWER PLAN-EL.122.0

SCALE: 1/4" = 1'-0"

NOTES

1. WIRING FOR ALL BLOWER CONTROL DEVICES IS SHOWN TYPICALLY AT AERATION BLOWER NO.3.
2. LOCK-OUT STOP PUSH-BUTTON STATION FOR THE 3 EFFLUENT PUMPS SHALL BE FURNISHED AND INSTALLED UNDER DIV. 16.
3. PROVIDE THRUWALL SEALS BY OZ GEDNEY OR EQUAL TO SEAL CABLE & CONDUITS ENTERING BUILDING.

RECORD PLAN

EARTH TECH
855 Winding Brook Drive Glastonbury, CT. 06033-1337 (860) 657-1200

NO.	REVISIONS	BY	DATE
1	REVISED TO RECORD PLAN	JPR	11/02

BRANFORD, CT
WASTEWATER TREATMENT FACILITY
SECONDARY PROCESS BUILDING
POWER PLANS-EL.113.50 (FIRST FLOOR) & EL.122.0

DESIGNED BY	DWG SCALE 1/4"=1'-0"
DRAWN BY JZaniboni	CONTRACT NO 31
CHECKED BY	DATE FEB. 1999

6E-1

SHEET 16 OF 169

PLOT DATE 05-05-99 PLOT SCALE 1
FILENAME 21B716E1.dwg

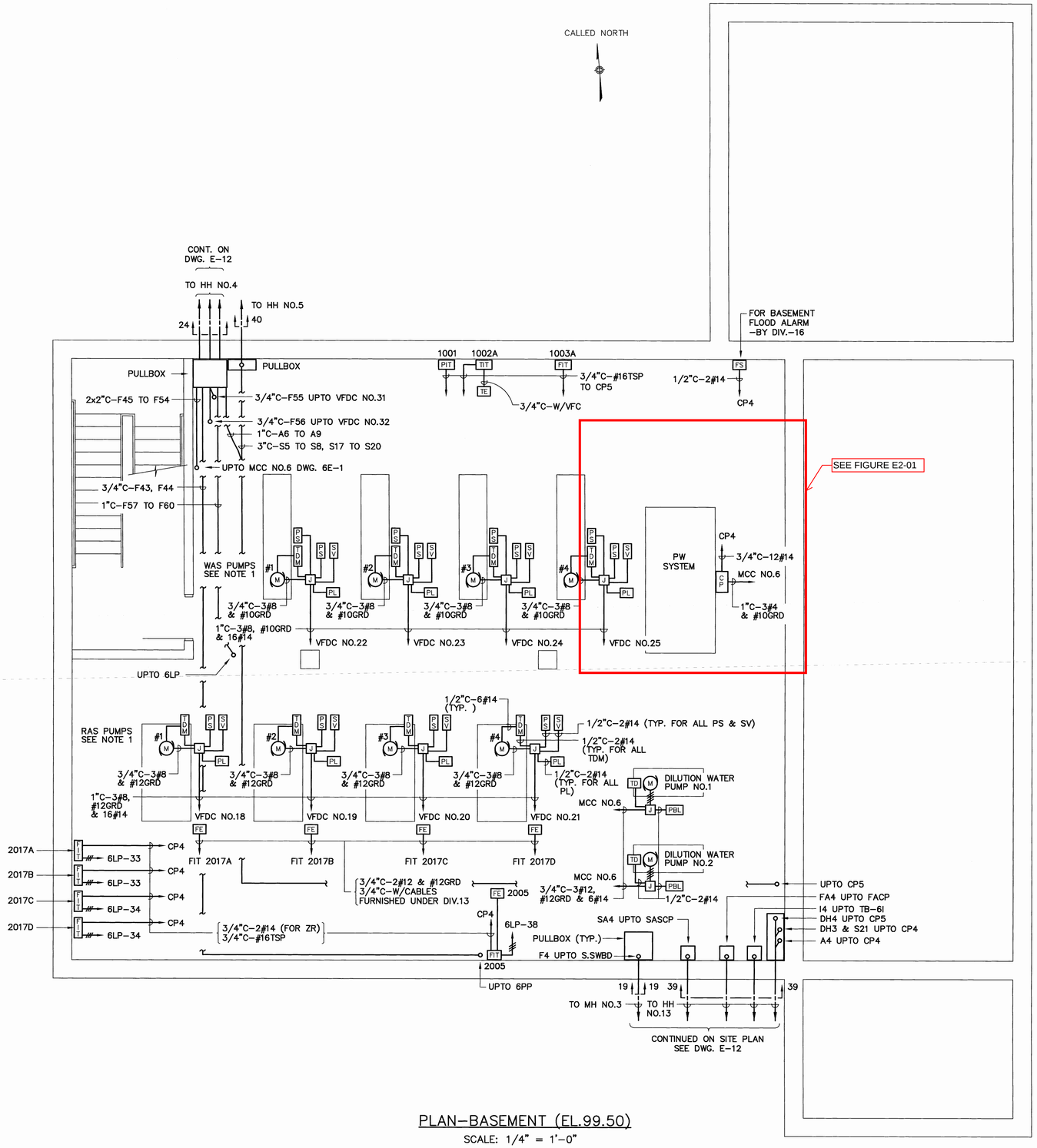

PLAN-BASEMENT (EL.99.50)

SCALE: 1/4" = 1'-0"

NOTES

1. WIRING FOR ALL WAS & RAS PUMPS CONTROL DEVICES IS SHOWN TYPICALLY AT RAS PUMP NO.4.
2. FOR UG DUCTBANK SECTIONS, SEE DWG NO. E-13.

RECORD PLAN

EARTH TECH
655 Winding Brook Drive Glastonbury, CT 06033-4337 (860) 657-1200

NO.	REVISIONS	BY	DATE
1	REVISED TO RECORD PLAN	JPR	11/02

BRANFORD, CT
WASTEWATER TREATMENT FACILITY
SECONDARY PROCESS BUILDING
BASEMENT POWER PLAN

DESIGNED BY	DWG SCALE 1/4"=1'-0"
DRAWN BY JZaniboni	CONTRACT NO 31
CHECKED BY	DATE FEB. 1999

6E-2

SHEET 161 OF 169

PLOT DATE 05-05-99 PLOT SCALE 1
FILENAME 218716e2.dwg

L:\work\396037\CAD\AS BUILTS\ELECTRICAL\6E2.dwg, model, 02/02/2024 09:20:33 AM, adam.martin, 1:1

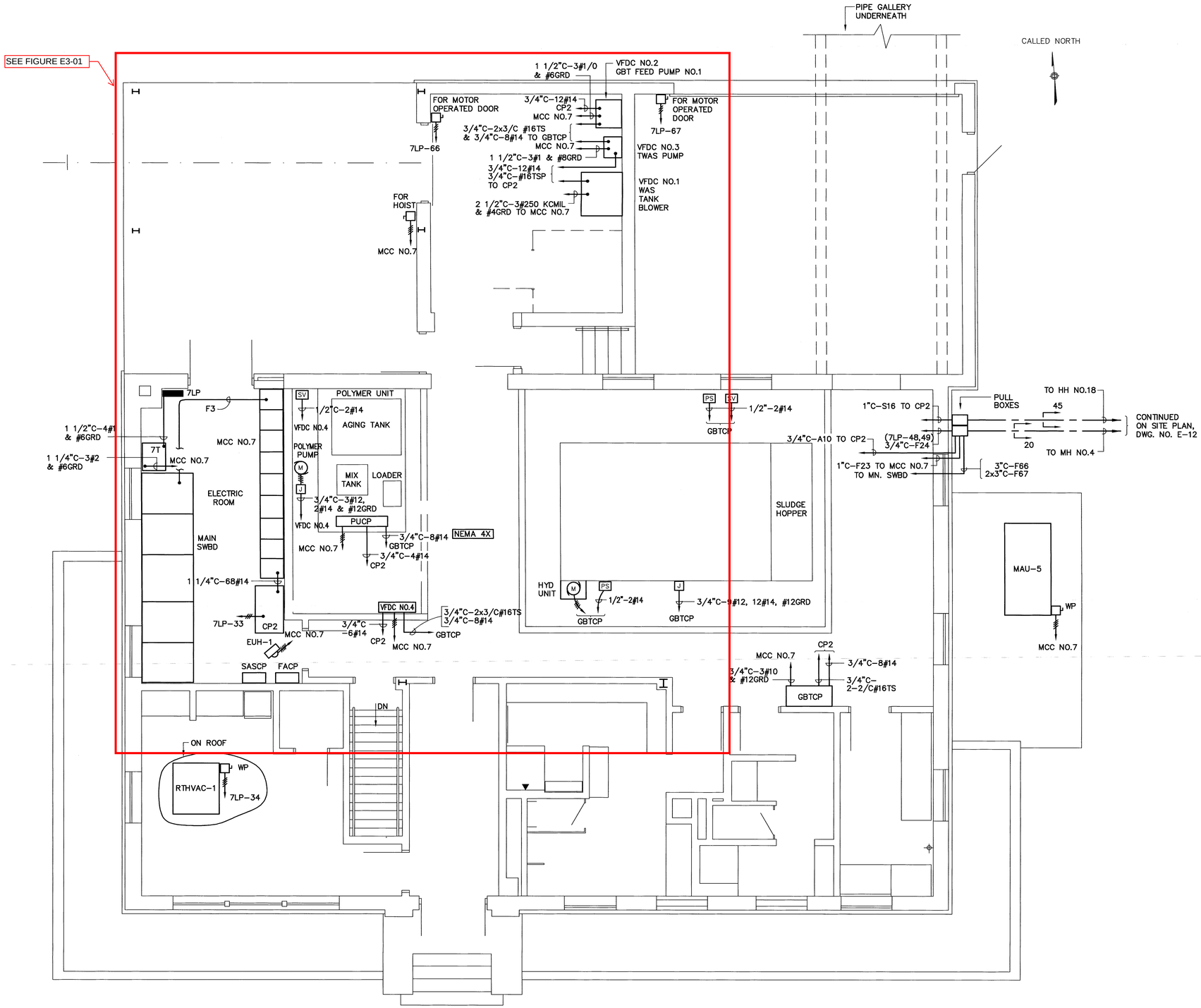

FIRST FLOOR POWER PLAN (EL.115.50)

SCALE: 1/4" = 1'-0"

RECORD PLAN

EARTH TECH

655 Winding Brook Drive Glastonbury, CT 06033-4337 (860) 657-1200

NO.	REVISIONS	BY	DATE
1	REVISED TO RECORD PLAN	JPR	11/02

BRANFORD, CT

WASTEWATER TREATMENT FACILITY

SOLIDS PROCESSING BUILDING
FIRST FLOOR POWER PLAN

DESIGNED BY	DWG SCALE 1/4"=1'-0"
DRAWN BY JZoniboni	CONTRACT NO 31
CHECKED BY	DATE FEB. 1999

7E-1

SHEET 164 OF 169

PLOT DATE 05-05-99 PLOT SCALE 1
FILENAME 2187176e1.dwg

L:\work\396031C\ADVAS BWRCS\ELECTRICAL\7E1.dwg, Model, 02/02/2004 08:27:19 AM, acom-martin, 1:1

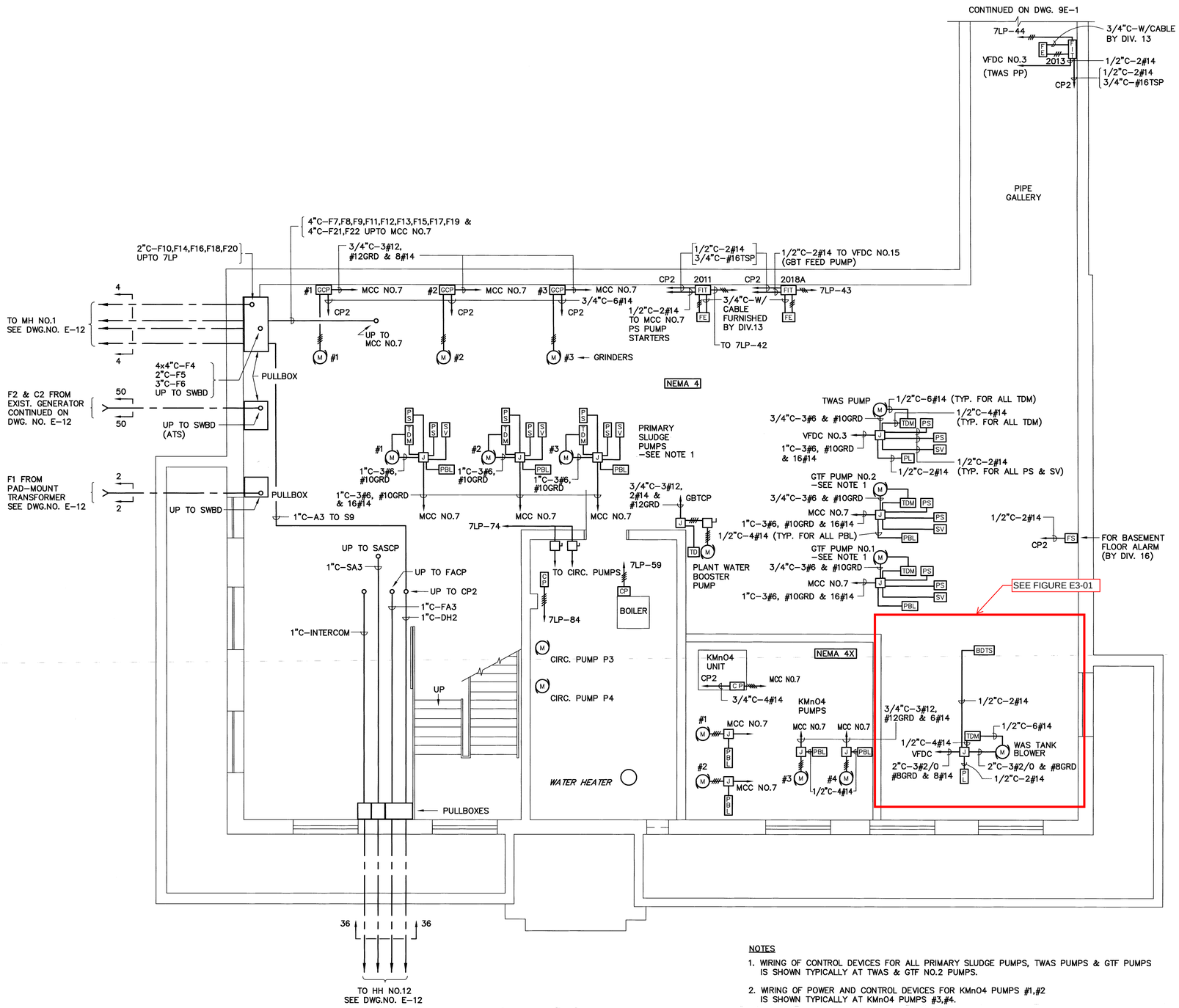

NOTES

1. WIRING OF CONTROL DEVICES FOR ALL PRIMARY SLUDGE PUMPS, TWAS PUMPS & GTF PUMPS IS SHOWN TYPICALLY AT TWAS & GTF NO.2 PUMPS.
2. WIRING OF POWER AND CONTROL DEVICES FOR KMnO4 PUMPS #1,#2 IS SHOWN TYPICALLY AT KMnO4 PUMPS #3,#4.
3. FOR UG DUCTBANK SECTIONS SEE DWG. NO. E-13.

BASEMENT POWER PLAN (EL.102.50)

SCALE: 1/4" = 1'-0"

RECORD PLAN

EARTH TECH
655 Winding Brook Drive Glastonbury, CT. 06033-4337 (860) 657-1200

NO.	REVISIONS	BY	DATE
1	REVISED TO RECORD PLAN	JPR	11/02

BRANFORD, CT
WASTEWATER TREATMENT FACILITY
SOLIDS PROCESSING BUILDING
BASEMENT POWER PLAN

DESIGNED BY	DWG SCALE 1/4"=1'-0"
DRAWN BY JJZaniboni	CONTRACT NO 31
CHECKED BY	DATE FEB. 1999

7E-2
SHEET 165 OF 169

PLOT DATE 05-05-99 PLOT SCALE 1
FILENAME 218717E2.dwg